CH585/CH584 Datasheet

V1.5

https://wch-ic.com

Overview

CH585 is a RISC-V MCU/SoC that integrates BLE wireless communication with high-speed USB and NFC. On-chip integrated 2Mbps Bluetooth Low Energy BLE communication module, USB full-speed controller and transceiver, USB high-speed controller and transceiver (480Mbps), NFC near-field communication wireless interface, segmented LCD driver module, LED dot-matrix screen interface, 2 SPI, 4 UARTs, 14 ADC, touchkey detection module and other rich peripheral resources.

Feature

- **Core**
  - QingKe 32-bit RISC-V3C core
  - Support RV32IMBC instruction set and self-extending instructions
  - Low-power consumption 3-level pipeline
  - Multi-speed system frequency, minimum 32KHz, maximum 78MHz
  - Unique high-speed interrupt response mechanism
- **512K-byte non-volatile memory FlashROM:**
  - 448KB user application program memory area CodeFlash
  - 32KB user non-volatile data memory area DataFlash
  - 24KB system boot program memory area BootLoader
  - 8KB system non-volatile configuration information memory area InfoFlash
  - Support ICP, ISP and IAP, support OTA wireless upgrade
- **128K-byte volatile data storage SRAM:**
  - Sleep retention memory area RAM96K using 96KB dual power supply
  - Sleep retention memory area RAM32K using 32KB dual power supply
- **Power management and low-power:**
  - Support 1.75V~3.6V power supply
  - Built-in DC-DC conversion, reducing power consumption
  - Idle mode: 1.44mA (PLL/HSE non-stop)
  - Halt mode: 1.01mA (PLL/HSE non-stop)
  - 200uA (PLL/HSE stopped)
  - Sleep mode: Multiple gears 2.6uA ~ 8.2uA
  - Shutdown mode: Multiple gears 0.65uA ~ 5.5uA
  - 3.3V disable DC-DC, Bluetooth receive current: 5.8mA
  - 3.3V enable DC-DC, Bluetooth receive current: 3.0mA
  - Optional low-voltage monitoring of low-power or high-precision battery voltage
- **Security properties:**
  - AES-128 encryption and decryption, unique chip ID
- **Bluetooth Low Energy (BLE):**
  - Integrated with 2.4GHz RF transceiver and baseband and link control
  - -95dBm RX sensitivity, programmable +4.5dBm TX power
  - BLE complies with Bluetooth Low Energy Specification 5.4
  - Support 2Mbps and 1Mbps
  - Provide optimized protocol stack and application layer API, and support networking
- **Real-time clock (RTC):**
  - 2 modes of timing and triggering
- **Segment LCD:** Supports 112-dot (28*4) LCD panel
- **LED dot matrix screen interface:** Support 1/2/4/8-channel data line
- **Clock:** Built-in PLL, 16MHz and 32KHz clocks
- **1-set full-speed USB 2.0 controller and PHY:**

- 15 endpoints, supports 64-byte packets, DMA support
- - Supports full/low-speed Host and Device modes

- **1-set 480Mbps high-speed USB 2.0 controller and PHY**
- Support 1024-byte data packet, support DMA
- Support high/full-speed Host and Device mode

- **Near Field Communication wireless interface NFC:**
- Support card reader mode and card mode
- Support ISO14443-A card reading, writing and other operations.

- **Analog to digital converter (ADC):**
- 12-bit analog to digital converter, support differential and single-ended input
- 14 external analog signal channels and 3 internal signal channels

- **Touchkey detection module:**
- 14-channel

- **Timer and pulse width modulation (PWM):**
- 4 sets of 26-bit timers, which can reach 4.2S at the frequency of 16MHz
- 4-channel capture/sample, support rising edge/falling edge /double edge
- 4-channel 26-bit PWM output
- 8-channel 8-bit PWM output, the first 6 channels support 16-bit PWM output

- **Universal asynchronous receiver/transmitter (UART):**
- 4 independent UARTs, compatible with 16C550, built-in 8-level FIFO
- 23-bit counter, up to 9Mbps communication baud rate
- UART0 supports some Modem, supports hardware automatic flow control
- UART0 supports automatic matching of slave address during multi-device communication

- **Serial peripheral interface (SPI):**
- 2 independent SPIs, built-in FIFOs
- Support Master and Slave mode, support DMA

- **2-wire serial interface (I2C):**
- Support Master and Slave modes, compatible with SMBus
- Support 7-bit or 10-bit address and bus broadcast

- **Temperature sensor (TS)**
- **1/2-wire emulation debug interface**
- **General-purpose input/output (GPIO):**
- 40 GPIOs, 2 of them support 5V signal input
- Optional pull-up or pull-down resistor, optional output drive capability
- 32 GPIOs support level or edge interrupt input and wake-up input

- **Package:** QFN

The CH584 is simplified based on the CH585 by removing a set of USBHS and SPI1 modules with 96KB of RAM.

Chip model	CodeFlash +BootLoader +DataFlash	RAM	RTC	Timer	Capture	PWM	Serial port	SPI	I2C	BLE	ADC and TS	Capacitive Touch-key	USB FS	USB HS	DC - DC	GPIO	NFC	LED dot matrix screen interface	Segment LCD	Package
CH585M	448+24+32K	128K		4	4	4+8	4	2	1		14+1	14-channel	1	1		40		1/2/4/8-channel	28*4	QFN48
CH585F	448+24+32K	128K		4	4	4+7	4	1	1		7+1	7-channel	1	1		24	√	-	14*4	QFN32
CH585C	448+24+32K	128K		4	4	4+5	2	1	-		4+1	-	1	1		17		-	-	QFN26C3
CH585D	448+24+32K	128K	√	4	4	4+3	2	1	-	√	4+1	-	1	1	√	12	-	-	-	QFN20
CH584M	448+24+32K	96K		4	4	4+8	4	1	1		14+1	14-channel	1	-		40		1/2/4/8-channel	28*4	QFN48
CH584X	480+24+512K	96K		4	4	4+8	4	1	1		14+1	14-channel	1	-		40	√	1/2/4/8-channel	28*4	QFN48
CH584F	448+24+32K	96K		4	4	4+7	4	1	1		7+1	7-channel	1	-		24		-	14*4	QFN32

Chapter 1 Pinouts and Pin Definitions

1.1 Pinouts

1.1.1 CH585 Pinouts

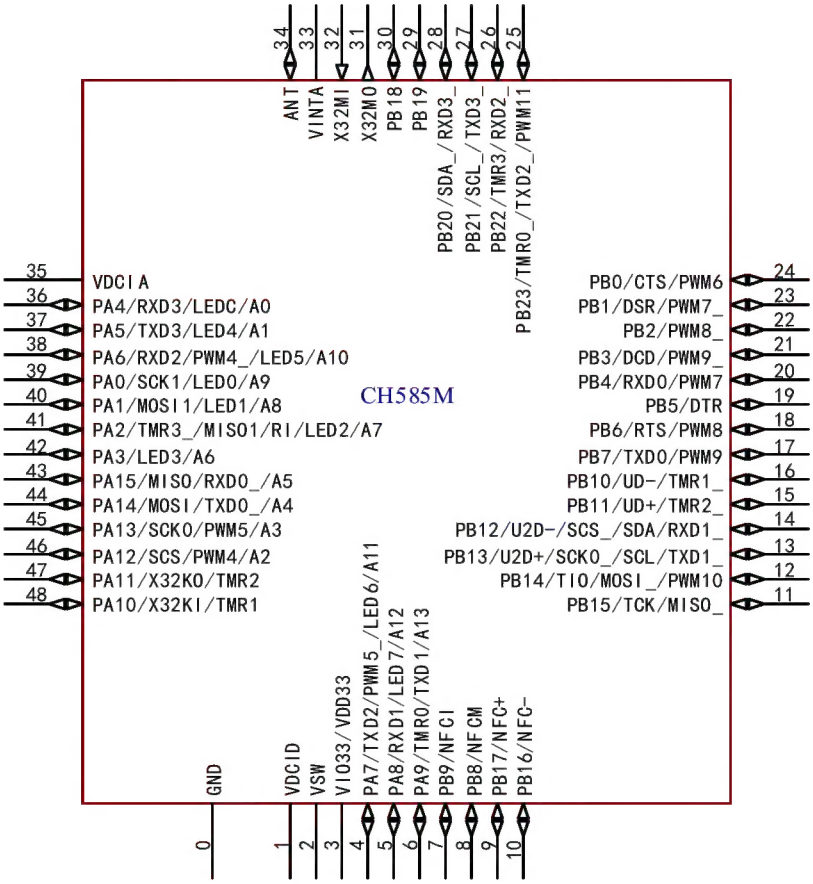

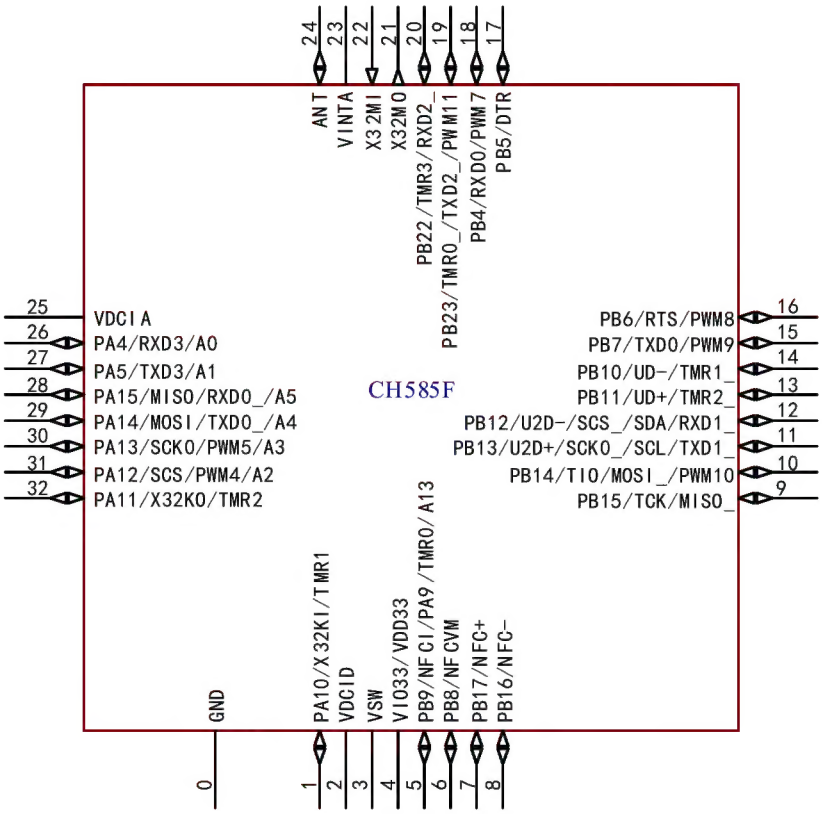
CH585F
24 ANT
23 VINTA
22 X32MI
21 X32MO
20 PB22/TMR3/RXD2_
19 PB23/TMR0_/TXD2_/PWM11
18 PB4/RXD0/PWM7
17 PB5/DTR
25 VDCIA
26 PA4/RXD3/A0
27 PA5/TXD3/A1
28 PA15/MISO/RXD0_/A5
29 PA14/MOSI/TXD0_/A4
30 PA13/SCK0/PWM5/A3
31 PA12/SCS/PWM4/A2
32 PA11/X32K0/TMR2
16 PB6/RTS/PWM8
15 PB7/TXD0/PWM9
14 PB10/UD-/TMR1_
13 PB11/UD+/TMR2_
12 PB12/U2D-/SCS_/SDA/RXD1_
11 PB13/U2D+/SCK0_/SCL/TXD1_
10 PB14/TIO/MOSI_/PWM10
9 PB15/TCK/MISO_
0 GND
1 PA10/X32KI/TMR1
2 VDCID
3 VSW
4 VIO33/VDD33
5 PB9/NFCI/PA9/TMR0/A13
6 PB8/NFCVM
7 PB17/NFC+
8 PB16/NFC-

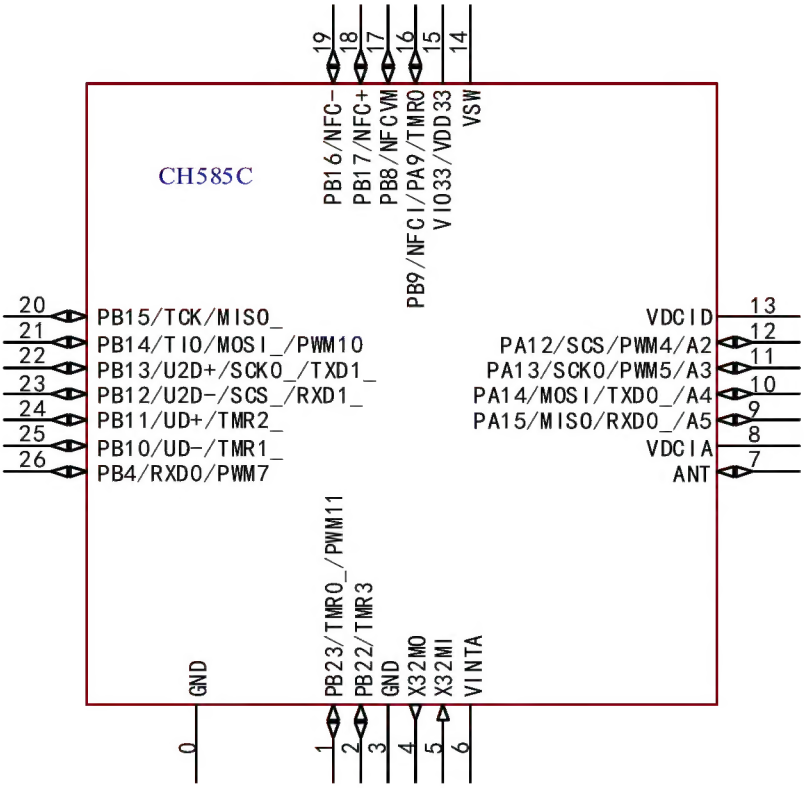
CH585C
19 PB16/NFC-
18 PB17/NFC+
17 PB8/NFCVM
16 PB9/NFCI/PA9/TMR0
15 VIO33/VDD33
14 VSW
20 PB15/TCK/MISO_
21 PB14/TIO/MOSI_/PWM10
22 PB13/U2D+/SCK0_/TXD1_
23 PB12/U2D-/SCS_/RXD1_
24 PB11/UD+/TMR2_
25 PB10/UD-/TMR1_
26 PB4/RXD0/PWM7
13 VDCID
12 PA12/SCS/PWM4/A2
11 PA13/SCK0/PWM5/A3
10 PA14/MOSI/TXD0_/A4
9 PA15/MISO/RXD0_/A5
8 VDCIA
7 ANT
0 GND
1 PB23/TMR0_/PWM11
2 PB22/TMR3
3 GND
4 X32MO
5 X32MI
6 VINTA

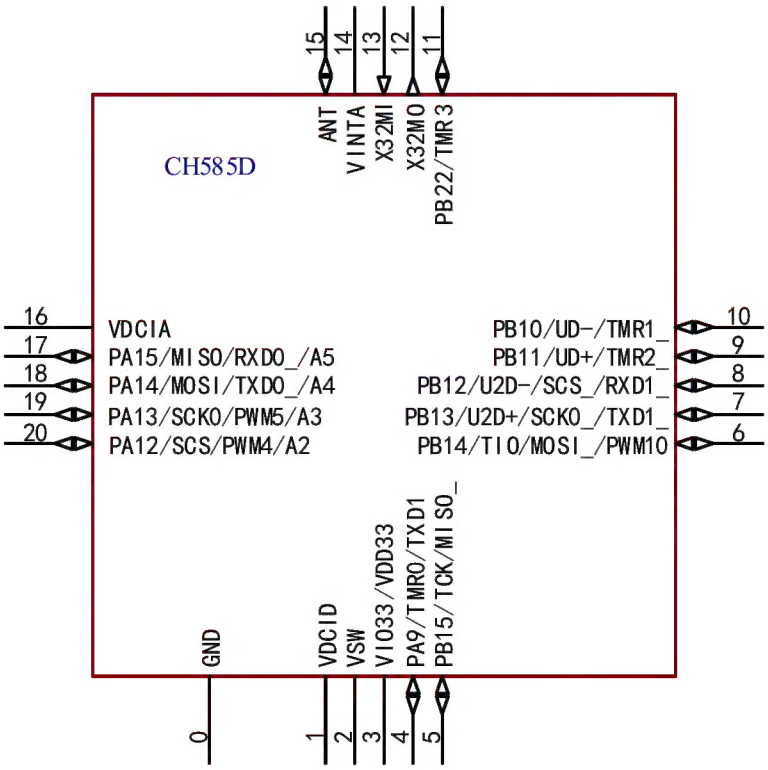

1.1.2 CH584 Pinouts

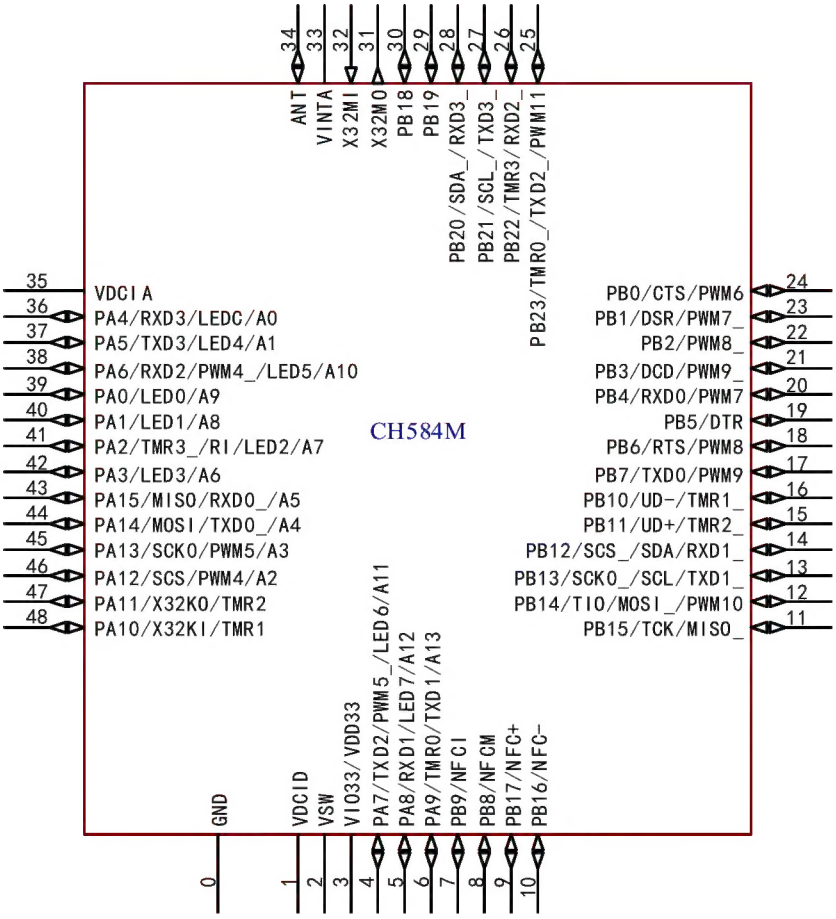

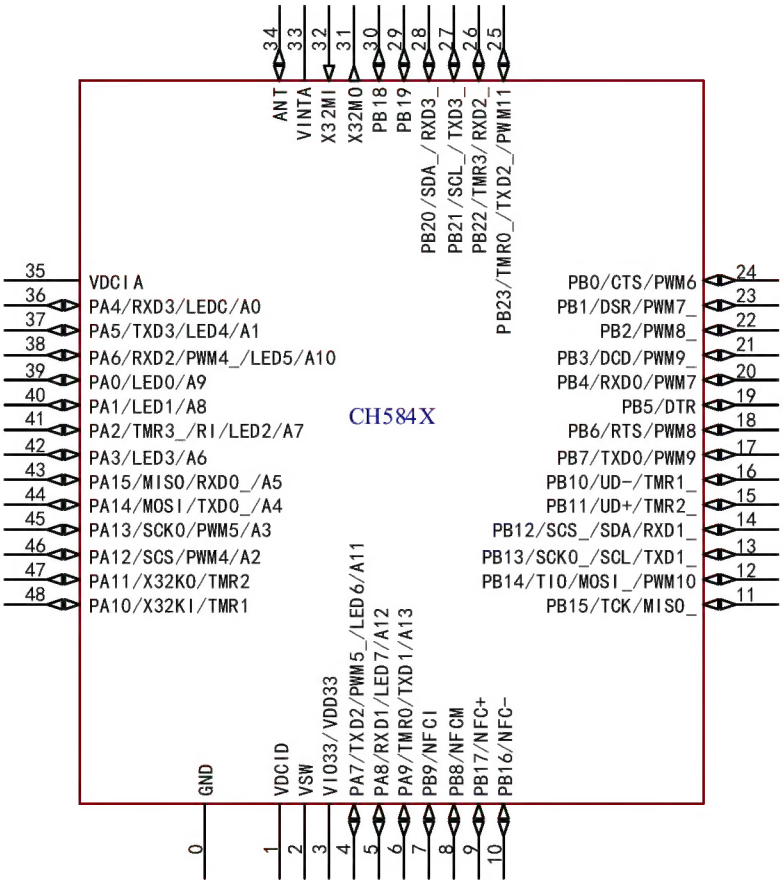
CH584X
34 ANT
33 VINTA
32 X32MI
31 X32MO
30 PB18
29 PB19
28 PB20/SDA_/RXD3_
27 PB21/SCL_/TXD3_
26 PB22/TMR3/RXD2_
25 PB23/TMR0_/TXD2_/PWM11
35 VDCIA
36 PA4/RXD3/LEDC/A0
37 PA5/TXD3/LED4/A1
38 PA6/RXD2/PWM4_/LED5/A10
39 PA0/LED0/A9
40 PA1/LED1/A8
41 PA2/TMR3_/RI/LED2/A7
42 PA3/LED3/A6
43 PA15/MISO/RXD0_/A5
44 PA14/MOSI/TXD0_/A4
45 PA13/SCK0/PWM5/A3
46 PA12/SCS/PWM4/A2
47 PA11/X32KO/TMR2
48 PA10/X32KI/TMR1
24 PB0/CTS/PWM6
23 PB1/DSR/PWM7_
22 PB2/PWM8_
21 PB3/DCD/PWM9_
20 PB4/RXD0/PWM7
19 PB5/DTR
18 PB6/RTS/PWM8
17 PB7/TXD0/PWM9
16 PB10/UD-/TMR1_
15 PB11/UD+/TMR2_
14 PB12/SCS_/SDA/RXD1_
13 PB13/SCK0_/SCL/TXD1_
12 PB14/TIO/MOSI_/PWM10
11 PB15/TCK/MISO_
0 GND
1 VDCID
2 VSW
3 VIO33/VDD33
4 PA7/TXD2/PWM5_/LED6/A11
5 PA8/RXD1/LED7/A12
6 PA9/TMR0/TXD1/A13
7 PB9/NFCI
8 PB8/NFCM
9 PB17/NFC+
10 PB16/NFC-

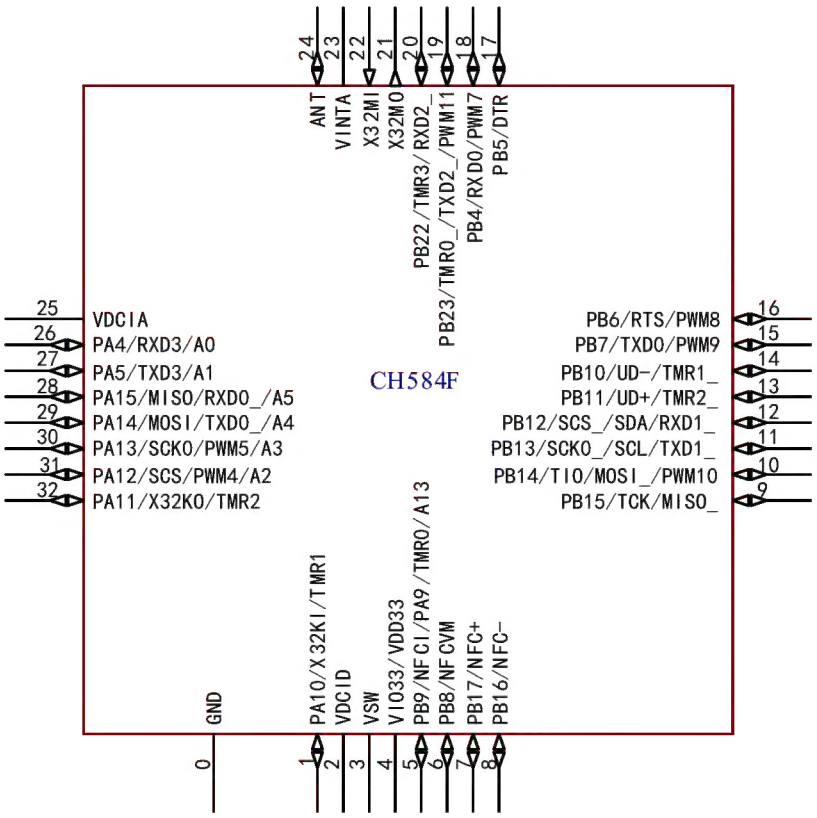
CH584F
24 ANT
23 VINTA
22 X32MI
21 X32MO
20 PB22/TMR3/RXD2_
19 PB23/TMR0_/TXD2_/PWM11
18 PB4/RXD0/PWM7
17 PB5/DTR
25 VDCIA
26 PA4/RXD3/A0
27 PA5/TXD3/A1
28 PA15/MISO/RXD0_/A5
29 PA14/MOSI/TXD0_/A4
30 PA13/SCK0/PWM5/A3
31 PA12/SCS/PWM4/A2
32 PA11/X32KO/TMR2
16 PB6/RTS/PWM8
15 PB7/TXD0/PWM9
14 PB10/UD-/TMR1_
13 PB11/UD+/TMR2_
12 PB12/SCS_/SDA/RXD1_
11 PB13/SCK0_/SCL/TXD1_
10 PB14/TIO/MOSI_/PWM10
9 PB15/TCK/MISO_
0 GND
1 PA10/X32KI/TMR1
2 VDCID
3 VSW
4 VIO33/VDD33
5 PB9/NFCI/PA9/TMR0/A13
6 PB8/NFCVM
7 PB17/NFC+
8 PB16/NFC-

1.2 Pin Definitions

Note that the pin function descriptions in the following table are for all functions and do not relate to specific models. There are differences in peripheral resources between different models, please check whether this function is available according to the product model resource table before checking.

Table 1-1 CH585 pin definitions

Pin No.				Pin name	Pin type(1)	Alternate function takes precedence	Function Description(2)
CH585C	CH585F	CH585M	CH585D				
0	0	0	0	GND	P	-	Chip EPAD, common ground, voltage 0V reference point.
3	-	-	-	GND	P	-	Common ground, voltage 0V reference point.
13	2	1	1	VDCID	P	-	Power input of internal digital circuit LDO regulator, requires an external decoupling capacitor. 4.7uF is recommended (1uF~10uF supported, small capacitance DC-DC efficiency slightly reduced) when DC-DC is enabled. While 0.1uF or more is recommended when DC-DC is disabled.
14	3	2	2	VSW	P	-	Internal DC-DC switch output, must be connected to VDCID with inductor in series close to the pin when DC-DC is enabled, and 10uH inductor is recommended (4.7uH~22uH supported). While it can be directly connected to VDCID when DC-DC is disabled.
15	4	3	3	VDD33	P	VBAT	DC-DC or battery power input, requires an external decoupling capacitor close to pin. 2.2uF or 1uF is recommended when DC-DC is enabled, while 0.1uF is recommended when DC-DC is disabled.
				VIO33	P	-	I/O power input.
-	-	4	-	PA7	I/O/A	TXD2 /PWM5_ /LED6 /A11	PA7: General-purpose bidirectional digital I/0 pin. TXD2: UART2 serial data output. PWM5_: PWM output channel 5 pin mapping. LED: LED screen interface serial data output 6. AIN11: ADC analog signal input channel 11.
-	-	5	-	PA8	I/O/A	RXD1 /LED7 /A12	PA8: General-purpose bidirectional digital I/0 pin. RXD1: UART2 serial data input. LED7: LED screen interface serial data output 7. A12: ADC analog signal input channel 12.
16	5	6	4	PA9(4)	I/O/A	TMR0 /TXD1 /A13	PA9: General-purpose bidirectional digital I/0 pin. TMR0: Timer 0 capture input 0 and PWM output channel 0. TXD1: UART1 serial data output. A13: ADC analog signal input channel 13.
		7	-	PB9(4)	I/O/A	NFCI	PB9: General-purpose bidirectional digital I/0 pin. NFCI: NFC analog input.
17	6	8	-	PB8	I/O/A	NFCM	PB8: General-purpose bidirectional digital I/0 pin.

Pin No.				Pin name	Pin type[1]	Alternate function takes precedence	Function Description[2]
CH585C	CH585F	CH585M	CH585D				
							NFCM: NFC analog input
18	7	9	-	PB17	I/O/A	NFC+	PB17: General-purpose bidirectional digital I/0 pin. NFC+: NFC analog output P-terminal.
19	8	10	-	PB16	I/O/A	NFC-	PB16: General-purpose bidirectional digital I/0 pin. NFC-: NFC analog output N-terminal.
20	9	11	5	PB15[3]	I/O/5VT	TCK /MISO_ /DTR_	PB15: General-purpose bidirectional digital I/0 pin. TCK[3]: Serial clock input of simulation debug interface. MISO_: MISO pin mapping of SPI0. DTR_: DTR pin mapping of UART0.
21	10	12	6	PB14[3]	I/O/5VT	TIO /MOSI_ /PWM10 /DSR_	PB14: General-purpose bidirectional digital I/0 pin. TIO[3]: Serial data input/output of simulation debug interface, with built-in pull-up. PWM10: PWM output channel 10. DSR_: DSR pin mapping of UART0.
22	11	13	7	PB13	I/O	U2D+ /SCK0_ /SCL /TXD1_	PB13: General-purpose bidirectional digital I/0 pin. U2D+: D+ data line of high-speed USB 2.0. SCK0_: SCK pin mapping of SPI0. SCL: I2C serial clock pin, host output and input/slave input. TXD1_: TXD1 pin mapping of UART1.
23	12	14	8	PB12	I/O	U2D- /SCS_ /SDA /RXD1_	PB12: General-purpose bidirectional digital I/0 pin. U2D-: D- data line of high-speed USB 2.0. SCS_: SCS pin mapping of SPI0. SDA: I2C serial data pin, open-drain output and input. RXD1_: RXD1 pin mapping of UART1.
24	13	15	9	PB11	I/O/A	UD+ /TMR2_	PB11: General-purpose bidirectional digital I/0 pin. UD+: D+ data line of full-speed USB 2.0. TMR2_: TMR2 pin mapping of timer 2.
25	14	16	10	PB10	I/O/A	UD- /TMR1_	PB10: General-purpose bidirectional digital I/0 pin. UD-: D- data line of full-speed USB 2.0. TMR1_: TMR1 pin mapping of timer 1.
-	15	17	-	PB7	I/O	TXD0 /PWM9	PB7: General-purpose bidirectional digital I/0 pin. TXD0: UART0 serial data output. PWM9: PWM output channel 9.
-	16	18	-	PB6	I/O	RTS /PWM8	PB6: General-purpose bidirectional digital I/0 pin. RTS: UART0's MODEM output signal, request to transmit. PWM8: PWM output channel 8.
-	17	19	-	PB5	I/O	DTR	PB5: General-purpose bidirectional digital I/0 pin. DTR: UART0's MODEM output signal, data terminal ready.
26	18	20	-	PB4	I/O	RXD0	PB4: General-purpose bidirectional digital I/0 pin.

Pin No.				Pin name	Pin type(1)	Alternate function takes precedence	Function Description(2)
CH585C	CH585F	CH585M	CH585D				
						/PWM7	RXD0: UART0 serial data input. PWM7: PWM output channel 7.
-	-	21	-	PB3	I/O	DCD /PWM9_	PB3: General-purpose bidirectional digital I/0 pin. DCD: UART0's MODEM input signal, carrier detection. PWM9_: PWM output channel 9 pin mapping.
-	-	22	-	PB2	I/O	PWM8_	PB2: General-purpose bidirectional digital I/0 pin. PWM8_: PWM output channel 8 pin mapping.
-	-	23	-	PB1	I/O	DSR /PWM7_	PB1: General-purpose bidirectional digital I/0 pin. DSR: UART0's MODEM input signal, data terminal ready. PWM7_: PWM output channel 7 pin mapping.
-	-	24	-	PB0	I/O	CTS /PWM6	PB0: General-purpose bidirectional digital I/0 pin. CTS: UART0's MODEM input signal, clear transmit. PWM6: PWM output channel 6.
1	19	25	-	PB23	I/O	/TMR0_ /TXD2_ /PWM11 /RST	PB23: General-purpose bidirectional digital I/0 pin. TMR0_: TMR0 pin mapping of timer 0. TXD2_: TXD2 pin mapping of UART2. PWM11: PWM output channel 11. RST: External reset input, active low, built-in pull-up resistor.
2	20	26	11	PB22	I/O	TMR3 /RXD2_	PB22: General-purpose bidirectional digital I/0 pin. TMR3: Capture input3 of Timer3 and PWM output channel3. RXD2_: RXD2 pin mapping of UART2.
-	-	27	-	PB21	I/O	SCL_ /TXD3_	PB21: General-purpose bidirectional digital I/0 pin. SCL_: I2C serial clock pin mapping. TXD3_: TXD3 pin mapping of UART3.
-	-	28	-	PB20	I/O	SDA_ /RXD3_	PB20: General-purpose bidirectional digital I/0 pin. SDA_: I2C serial data pin mapping. RXD3_: RXD3 pin mapping of UART3.
-	-	29	-	PB19	I/O	-	PB19: General-purpose bidirectional digital I/0 pin.
-	-	30	-	PB18	I/O	-	PB18: General-purpose bidirectional digital I/0 pin.
4	21	31	12	X32MO	I/A	-	Inverted output of high frequency oscillator HSE, connected to one end of external 32MHz crystal.
5	22	32	13	X32MI	A	-	Input of high frequency oscillator HSE, connected to the other end of external 32MHz crystal.
6	23	33	14	VINTA	P	-	The power node of the internal analog circuit requires an external decoupling capacitor close to the pin. 0.47uF is recommended when DC-DC is not enabled; 0.47uF can be used when DC-DC is enabled (0.47uF to 2.2uF is supported, and a large capacitance is good for signal quality but consumes slightly more power).

Pin No.				Pin name	Pin type(1)	Alternate function takes precedence	Function Description(2)
CH585C	CH585F	CH585M	CH585D				
7	24	34	15	ANT	A	-	RF signal input and output, it is recommended to connect the antenna directly.
8	25	35	16	VDCIA	P	-	The power input of the LDO regulator of the internal analog circuit requires an external decoupling capacitor. 0.1uF is recommended, directly connected to VDCID.
-	26	36	-	PA4	I/O/A	RXD3 /LEDC /A0	PA4: General-purpose bidirectional digital I/0 pin. RXD3: UART3 serial data input. LEDC: LED screen interface serial clock output. A0: ADC analog signal input channel 0.
-	27	37	-	PA5	I/O/A	TXD3 /LED4 /A1	PA5: General-purpose bidirectional digital I/0 pin. TXD3: UART3 serial data output. LED4: LED screen interface serial data output 4。 A1: ADC analog signal input channel 1。
-	-	38	-	PA6	I/O/A	RXD2 /PWM4_ /LED5 /A10	PA6: General-purpose bidirectional digital I/0 pin. RXD2: UART2 serial data input. PWM4_: PWM output channel 4 pin mapping. LED5: LED screen interface serial data output 5. A10: ADC analog signal input channel 10.
-	-	39	-	PA0	I/O/A	LED0 /A9	PA0: General-purpose bidirectional digital I/0 pin. SCK1: SPI1 serial clock pin, host output. LED0: LED screen interface serial data output 0. A9: ADC analog signal input channel 9.
-	-	40	-	PA1	I/O/A	LED1 /A8	PA1: General-purpose bidirectional digital I/0 pin. MOSI1: SPI1 serial clock pin, host output. LED1: LED screen interface serial data output 1. A8: ADC analog signal input channel 8.
-	-	41	-	PA2	I/O/A	TMR3_ /RI /LED2 /A7	PA2: General-purpose bidirectional digital I/0 pin. TMR3_: TMR3 pin mapping of timer 3. MISO1: SPI1 serial data pin, host input. RI: MODEM input signal of UART0, ringing indication. LED2: LED screen interface serial data output 2. A7: ADC analog signal input channel 7.
-	-	42	-	PA3	I/O/A	LED3 /A6	PA3: General-purpose bidirectional digital I/0 pin. LED3: LED screen interface serial data output 3. A6: ADC analog signal input channel 6.
9	28	43	17	PA15	I/O/A	MISO /RXD0_ /A5	PA15: General-purpose bidirectional digital I/0 pin. MISO: SPI0 serial data pin, host input/slave output. RXD0_: RXD0 pin mapping of UART0. A5: ADC analog signal input channel 5.

Pin No.				Pin name	Pin type(1)	Alternate function takes precedence	Function Description(2)
CH585C	CH585F	CH585M	CH585D				
10	29	44	18	PA14	I/O/A	MOSI /TXD0_ /A4	PA14: General-purpose bidirectional digital I/0 pin. MOSI: SPI0 serial data pin, host output/slave input. TXD0_: TXD0 pin mapping of UART0. A4: ADC analog signal input channel 4.
11	30	45	19	PA13	I/O/A	SCK0 /PWM5 /A3	PA13: General-purpose bidirectional digital I/0 pin. SCK0: SPI0 serial clock pin, host output/slave input. PWM5: PWM output channel 5. A3: ADC analog signal input channel 3.
12	31	46	20	PA12	I/O/A	SCS /PWM4 /A2	PA12: General-purpose bidirectional digital I/0 pin. SCS: Chip selection input in SPI0 slave mode, active low. PWM4: PWM output channel 4. A2: ADC analog signal input channel 2.
-	32	47	-	PA11	I/O/A	X32KO /TMR2	PA11: General-purpose bidirectional digital I/0 pin. X32KO: The inverting output end of the low-frequency oscillator is externally connected with one end of a 32KHz crystal. TMR2: Capture input 2 and PWM output channel 2 of timer 2.
-	1	48	-	PA10	I/O/A	X32KI /TMR1	PA10: General-purpose bidirectional digital I/0 pin. X32KI: The input end of the low-frequency oscillator is externally connected with the other end of the 32KHz crystal. TMR1: Capture input 1 of timer 1 and PWM output channel 1.

Note: 1. Pin Type: P=Power supply; I=TTL/CMOS level Schmitt input; O=CMOS level 3-state output; A= Analog signal input or output; 5VT= Support 5V signal voltage input.

2. The alternate function and mapping of pins are arranged in the table from top to bottom according to their priority, with the GPIO function as the lowest priority.

3. 1/2-wire simulation debugging interface is configured through ISP tools. After the simulation debugging interface is enabled, PB15 and PB14 are only used as TCK and TIO, and are no longer used as GPIO or peripheral alternate function pins. PB15 and PB14 can only be used for GPIO and peripheral alternate function pins after the emulation debugging interface is closed. The HSI clock must be turned on when using the 1-wire emulation debug interface.

4. For CH585F and CH585C chips, PA9 and PB9 pins are short-bonded inside the chips, and it is forbidden to configure both IO as output functions.

Table 1-2 CH584 pin definitions

Pin No.		Pin name	Pin type[1]	Alternate function takes precedence	Function Description[2]
CH584F	CH584M/X				
0	0	GND	P	-	Chip EPAD, common ground, voltage 0V reference point.
-	-	GND	P	-	Common ground, voltage 0V reference point.
2	1	VDCID	P	-	Power input of internal digital circuit LDO regulator, requires an external decoupling capacitor. 4.7uF is recommended (1uF~10uF supported, small capacitance DC-DC efficiency slightly reduced) when DC-DC is enabled. While 0.1uF or more is recommended when DC-DC is disabled.
3	2	VSW	P	-	Internal DC-DC switch output, must be connected to VDCID with inductor in series close to the pin when DC-DC is enabled, and 10uH inductor is recommended (4.7uH~22uH supported). While it can be directly connected to VDCID when DC-DC is disabled.
4	3	VDD33	P	VBAT	DC-DC or battery power input, requires an external decoupling capacitor close to pin. 2.2uF or 1uF is recommended when DC-DC is enabled, while 0.1uF is recommended when DC-DC is disabled.
		VIO33	P	-	I/O power input.
-	4	PA7	I/O/A	TXD2 /PWM5_ /LED6 /A11	PA7: General-purpose bidirectional digital I/0 pin. TXD2: UART2 serial data output. PWM5_: PWM output channel 5 pin mapping. LED: LED screen interface serial data output 6. AIN11: ADC analog signal input channel 11.
-	5	PA8	I/O/A	RXD1 /LED7 /A12	PA8: General-purpose bidirectional digital I/0 pin. RXD1: UART1 serial data input. LED7: LED screen interface serial data output 7. A12: ADC analog signal input channel 12.
5	6	PA9[4]	I/O/A	TMR0 /TXD1 /A13	PA9: General-purpose bidirectional digital I/0 pin. TMR0: Timer 0 capture input 0 and PWM output channel 0. TXD1: UART1 serial data output. A13: ADC analog signal input channel 13.
	7	PB9[4]	I/O/A	NFCI	PB9: General-purpose bidirectional digital I/0 pin. NFCI: NFC analog input.
6	8	PB8	I/O/A	NFCM	PB8: General-purpose bidirectional digital I/0 pin. NFCM: NFC analog input
7	9	PB17	I/O/A	NFC+	PB17: General-purpose bidirectional digital I/0 pin. NFC+: NFC analog output P terminal.
8	10	PB16	I/O/A	NFC-	PB16: General-purpose bidirectional digital I/0 pin. NFC-: NFC analog output N terminal.

Pin No.		Pin name	Pin type[1]	Alternate function takes precedence	Function Description[2]
CH584F	CH584M/X				
9	11	PB15[3]	I/O/5VT	TCK /MISO_ /DTR_	PB15: General-purpose bidirectional digital I/0 pin. TCK[3]: Serial clock input of simulation debug interface. MISO_: MISO pin mapping of SPI0. DTR_: DTR pin mapping of UART0.
10	12	PB14[3]	I/O/5VT	TIO /MOSI_ /PWM10 /DSR_	PB14: General-purpose bidirectional digital I/0 pin. TIO[3]: Serial data input/output of simulation debug interface, with built-in pull-up. PWM10: PWM output channel 10. DSR_: DSR pin mapping of UART0.
11	13	PB13	I/O	SCK0_ /SCL /TXD1_	PB13: General-purpose bidirectional digital I/0 pin. U2D+: D+ data line of high-speed USB 2.0. SCK0_: SCK pin mapping of SPI0. SCL: I2C serial clock pin, host output and input/slave input. TXD1_: TXD1 pin mapping of UART1.
12	14	PB12	I/O	SCS_ /SDA /RXD1_	PB12: General-purpose bidirectional digital I/0 pin. U2D-: D- data line of high-speed USB 2.0. SCS_: SCS pin mapping of SPI0. SDA: I2C serial data pin, open-drain output and input. RXD1_: RXD1 pin mapping of UART1.
13	15	PB11	I/O/A	UD+ /TMR2_	PB11: General-purpose bidirectional digital I/0 pin. UD+: D+ data line of full-speed USB 2.0. TMR2_: TMR2 pin mapping of timer 2.
14	16	PB10	I/O/A	UD- /TMR1_	PB10: General-purpose bidirectional digital I/0 pin. UD-: D- data line of full-speed USB 2.0. TMR1_: TMR1 pin mapping of timer 1.
15	17	PB7	I/O	TXD0 /PWM9	PB7: General-purpose bidirectional digital I/0 pin. TXD0: UART0 serial data output. PWM9: PWM output channel 9.
16	18	PB6	I/O	RTS /PWM8	PB6: General-purpose bidirectional digital I/0 pin. RTS: UART0's MODEM output signal, request to transmit. PWM8: PWM output channel 8.
17	19	PB5	I/O	DTR	PB5: General-purpose bidirectional digital I/0 pin. DTR: UART0's MODEM output signal, data terminal ready.
18	20	PB4	I/O	RXD0 /PWM7	PB4: General-purpose bidirectional digital I/0 pin. RXD0: UART0 serial data input. PWM7: PWM output channel 7.
-	21	PB3	I/O	DCD /PWM9_	PB3: General-purpose bidirectional digital I/0 pin. DCD: UART0's MODEM input signal, carrier detection. PWM9_: PWM output channel 9 pin mapping.

Pin No.		Pin name	Pin type(1)	Alternate function takes precedence	Function Description(2)
CH584F	CH584M/X				
-	22	PB2	I/O	PWM8_	PB2: General-purpose bidirectional digital I/0 pin. PWM8_: PWM output channel 8 pin mapping.
-	23	PB1	I/O	DSR /PWM7_	PB1: General-purpose bidirectional digital I/0 pin. DSR: UART0's MODEM input signal, data terminal ready. PWM7_: PWM output channel 7 pin mapping.
-	24	PB0	I/O	CTS /PWM6	PB0: General-purpose bidirectional digital I/0 pin. CTS: UART0's MODEM input signal, clear transmit. PWM6: PWM output channel 6.
19	25	PB23	I/O	/TMR0_ /TXD2_ /PWM11 /RST	PB23: General-purpose bidirectional digital I/0 pin. TMR0_: TMR0 pin mapping of timer 0. TXD2_: TXD2 pin mapping of UART2. PWM11: PWM output channel 11. RST: External reset input, active low, built-in pull-up resistor.
20	26	PB22	I/O	TMR3 /RXD2_	PB22: General-purpose bidirectional digital I/0 pin. TMR3: Capture input3 of Timer3 and PWM output channel3. RXD2_: RXD2 pin mapping of UART2.
-	27	PB21	I/O	SCL_ /TXD3_	PB21: General-purpose bidirectional digital I/0 pin. SCL_: I2C serial clock pin mapping. TXD3_: TXD3 pin mapping of UART3.
-	28	PB20	I/O	SDA_ /RXD3_	PB20: General-purpose bidirectional digital I/0 pin. SDA_: I2C serial data pin mapping. RXD3_: RXD3 pin mapping of UART3.
-	29	PB19	I/O	-	PB19: General-purpose bidirectional digital I/0 pin.
-	30	PB18	I/O	-	PB18: General-purpose bidirectional digital I/0 pin.
21	31	X32MO	I/A	-	Inverted output of high frequency oscillator HSE, connected to one end of external 32MHz crystal.
22	32	X32MI	A	-	Input of high frequency oscillator HSE, connected to the other end of external 32MHz crystal.
23	33	VINTA	P	-	The power node of the internal analog circuit requires an external decoupling capacitor close to the pin. 0.47uF is recommended when DC-DC is not enabled; 0.47uF can be used when DC-DC is enabled (0.47uF to 2.2uF is supported, and a large capacitance is good for signal quality but consumes slightly more power).
24	34	ANT	A	-	RF signal input and output, it is recommended to connect the antenna directly.
25	35	VDCIA	P	-	The power input of the LDO regulator of the internal analog circuit requires an external decoupling capacitor. 0.1uF is recommended, directly connected to VDCID.

Pin No.		Pin name	Pin type(1)	Alternate function takes precedence	Function Description(2)
CH584F	CH584M/X				
26	36	PA4	I/O/A	RXD3 /LEDC /A0	PA4: General-purpose bidirectional digital I/0 pin. RXD3: UART3 serial data input. LEDC: LED screen interface serial clock output. A0: ADC analog signal input channel 0.
27	37	PA5	I/O/A	TXD3 /LED4 /A1	PA5: General-purpose bidirectional digital I/0 pin. TXD3: UART3 serial data output. LED4: LED screen interface serial data output 4。 A1: ADC analog signal input channel 1。
-	38	PA6	I/O/A	RXD2 /PWM4_ /LED5 /A10	PA6: General-purpose bidirectional digital I/0 pin. RXD2: UART2 serial data input. PWM4_: PWM output channel 4 pin mapping. LED5: LED screen interface serial data output 5. A10: ADC analog signal input channel 10.
-	39	PA0	I/O/A	LED0 /A9	PA0: General-purpose bidirectional digital I/0 pin. LED0: LED screen interface serial data output 0. A9: ADC analog signal input channel 9.
-	40	PA1	I/O/A	LED1 /A8	PA1: General-purpose bidirectional digital I/0 pin. LED1: LED screen interface serial data output 1. A8: ADC analog signal input channel 8.
-	41	PA2	I/O/A	TMR3_ /RI /LED2 /A7	PA2: General-purpose bidirectional digital I/0 pin. TMR3_: TMR3 pin mapping of timer 3. RI: MODEM input signal of UART0, ringing indication. LED2: LED screen interface serial data output 2. A7: ADC analog signal input channel 7.
-	42	PA3	I/O/A	LED3 /A6	PA3: General-purpose bidirectional digital I/0 pin. LED3: LED screen interface serial data output 3. A6: ADC analog signal input channel 6.
28	43	PA15	I/O/A	MISO /RXD0_ /A5	PA15: General-purpose bidirectional digital I/0 pin. MISO: SPI0 serial data pin, host input/slave output. RXD0_: RXD0 pin mapping of UART0. A5: ADC analog signal input channel 5.
29	44	PA14	I/O/A	MOSI /TXD0_ /A4	PA14: General-purpose bidirectional digital I/0 pin. MOSI: SPI0 serial data pin, host output/slave input. TXD0_: TXD0 pin mapping of UART0. A4: ADC analog signal input channel 4.
30	45	PA13	I/O/A	SCK0 /PWM5 /A3	PA13: General-purpose bidirectional digital I/0 pin. SCK0: SPI0 serial clock pin, host output/slave input. PWM5: PWM output channel 5. A3: ADC analog signal input channel 3.

Pin No.		Pin name	Pin type(1)	Alternate function takes precedence	Function Description(2)
CH584F	CH584M/X				
31	46	PA12	I/O/A	SCS /PWM4 /A2	PA12: General-purpose bidirectional digital I/0 pin. SCS: Chip selection input in SPI0 slave mode, active low. PWM4: PWM output channel 4. A2: ADC analog signal input channel 2.
32	47	PA11	I/O/A	X32KO /TMR2	PA11: General-purpose bidirectional digital I/0 pin. X32KO: The inverting output end of the low-frequency oscillator is externally connected with one end of a 32KHz crystal. TMR2: Capture input 2 and PWM output channel 2 of timer 2.
1	48	PA10	I/O/A	X32KI /TMR1	PA10: General-purpose bidirectional digital I/0 pin. X32KI: The input end of the low-frequency oscillator is externally connected with the other end of the 32KHz crystal. TMR1: Capture input 1 of timer 1 and PWM output channel 1.

Note: *1. Pin Type: P=Power supply; I=TTL/CMOS level Schmitt input; O=CMOS level 3-state output; A= Analog signal input or output; 5VT= Support 5V signal voltage input.*

2. The alternate function and mapping of pins are arranged in the table from top to bottom according to their priority, with the GPIO function as the lowest priority.

3. 1/2-wire simulation debugging interface is configured through ISP tools. After the simulation debugging interface is enabled, PB15 and PB14 are only used as TCK and TIO, and are no longer used as GPIO or peripheral alternate function pins. PB15 and PB14 can only be used for GPIO and peripheral alternate function pins after the emulation debugging interface is closed. The HSI clock must be turned on when using the 1-wire emulation debug interface.

4. For CH585F chips, PA9 and PB9 pins are short-bonded inside the chips, and it is forbidden to configure both IO as output functions.

Table 1-3 Description of pins reused for segment LCD driver

Pin name	Type	Alternate function	Description
PB4~PB7	A	COM0~COM3	Drive the common pins of the segment LCD, select some or all of them as needed. These common pins are controlled by the corresponding bits in register R32_PIN_IN_DIS. When this bit is 0, these common pins are used for digital input or other non-LCD functions; when it is 1, these pins are LCD segment drivers.
PB0~PB3	A	SEG0~SEG3	Drive each segment of the segment LCD, either partially or completely as required. These segment LCD driver pins are controlled by the corresponding bits in register R32_PIN_IN_DIS and register
PA0~PA3		SEG4~SEG7	
PB8~PB23		SEG8~SEG23	
PA7~PA9		SEG24~SEG26	

PA13		SEG27	R16_PIN_CONFIG, respectively. When the corresponding bit is 0, these pins are used for digital input or other non-LCD functions; when it is 1, these pins are LCD segment drivers.

Chapter 2 System Architecture and Memory

2.1 System Architecture

The following figure shows the system architecture block diagram of CH585. Its core is QingKe RISC-V microprocessor, please refer to QingKe Processor Manual for details.

Figure 2-1 CH585 internal structure block diagram

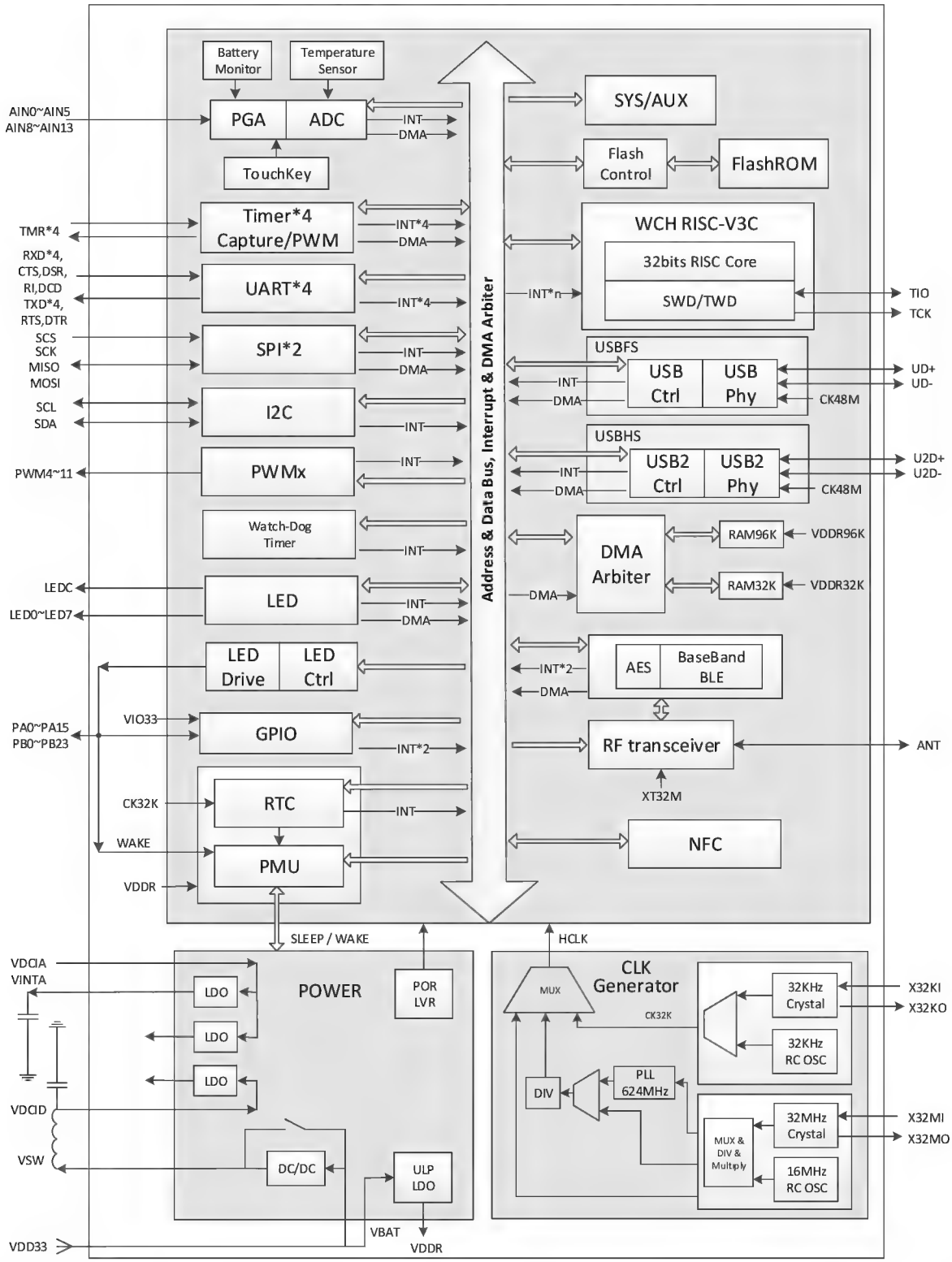

2.2 Memory Mapping

The addressing space of CH585 mainly includes several different areas, CODE area/FlashROM, DATA area/SRAM and peripherals, as shown in the figure below.

Figure 2-2 Memory mapping diagram

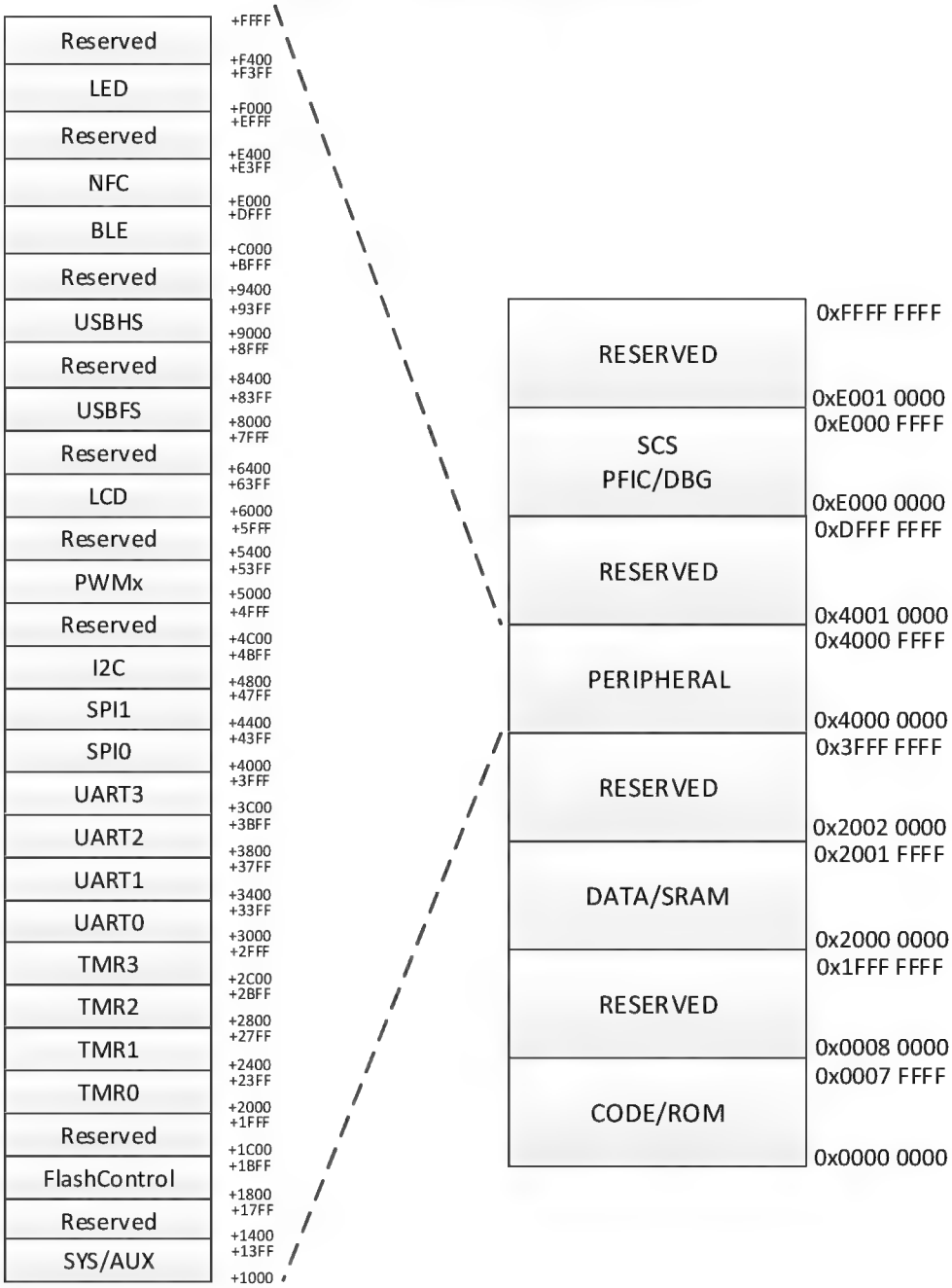

2.3 Memory Mapping Table

The address range of each memory mapping area is shown in the table below:

Table 2-1 Memory mapping area address

Address range	Application	Description
0x00000000-0x0007FFFF	On-chip CODE area, non-volatile memory	512KB, FlashROM
0x00080000-0x1FFFFFFF	Reserved	-
0x20000000-0x2001FFFF	On-chip DATA area, volatile memory	128KB, SRAM
0x20020000-0x3FFFFFFF	Reserved	-
0x40000000-0x4000FFFF	Various peripherals	Multiple peripheral modules
0x40010000-0xE000BFFF	Reserved	-
0xE0000000-0xE000FFFF	Various peripherals in system	System Control Space (SCS)
0xE0010000-0xFFFFFFFF	Reserved	-

2.3.1 On-chip CODE Area Mapping Table

Table 2-2-1 CODE area address (For CH584 and CH585 chips except CH584X)

Address range	Application	Description
0x00000000-0x0006FFFF	User application program memory, CodeFlash	448KB
0x00070000-0x00077FFF	User non-volatile data memory, DataFlash	32KB
0x00078000-0x0007DFFF	System bootloader memory, BootLoader	24KB
0x0007E000-0x0007FFFF	System non-volatile configuration information memory, InfoFlash	8KB

The configuration information of the addresses 0x0007E000-0x0007EEFF can be set by the user through tools.

Table 2-2-2 CODE area address (For CH584X chips except CH584X)

Address range	Application	Description
0x00000000-0x00077FFF	User application program memory, CodeFlash	480KB
-	User non-volatile data memory, DataFlash	512KB
0x00078000-0x0007DFFF	System bootloader memory, BootLoader	24KB
0x0007E000-0x0007FFFF	System non-volatile configuration information memory, InfoFlash	8KB

The configuration information of the addresses 0x0007E000-0x0007EEFF can be set by the user through tools.

Note: Please refer to the example program for the specific operation of reading DataFlash.

Table 2-3 Description of user non-volatile configuration information

Bit address	Name	Application	Default value
Bit 2~Bit 0	RESERVED	Reserved	101b
Bit 3	CFG_RESET_EN	RST external manual reset input pin enable	0
Bit 4	CFG_DEBUG_EN	1/2-wire simulation debug interface SWD/TWD enable	1
Bit 5	CFG_IWDG_EN	IWDG enable	0

Bit 6	CFG_BOOT_EN	BootLoader enable	1
Bit 7	CFG_ROM_READ	Code and data protection in FlashROM: 0-Disable the programmer to read out, and keep the program secret; 1- Enable read out.	1
Bit 27~Bit 8	RESERVED	Reserved	FFF0Fh
Bit 31~Bit 28	VALID_SIG	Configuration information valid flag, fixed value	0100b

Note: When CFG_DEBUG_EN=1, CFG_RESET_EN=0, CFG_ROM_READ=1, the 1-/2-wire emulation debug interface is enabled.

2.3.2 On-chip DATA Area Mapping Table

Table 2-4 DATA area address

Address range	Application	Description
0x20000000-0x20005FFF	Independently maintainable memory area supplied by the main + auxiliary dual power, RAM96K	96KB
0x20006000-0x200067FF	Independently maintainable memory area supplied by the main + auxiliary dual power, RAM32K	32KB

2.3.3 Peripheral Address Assignment

CH585 mainly contains the following peripherals. Each peripheral occupies a certain address space, and the actual access address of peripheral register is: base address + offset address. In the following chapters, the address of the register is described in detail. The following table shows the assignment of base address of each peripheral.

Table 2-5 Peripheral base address assignment table

Peripheral No.	Peripheral name	Peripheral base address
1	SYS (PMU/RTC/GPIO etc.) AUX (ADC/TKEY/PLL etc.)	0x4000 1000
2	FlashROM-Control	0x4000 1800
3	TMR0	0x4000 2000
4	TMR1	0x4000 2400
5	TMR2	0x4000 2800
6	TMR3	0x4000 2C00
7	UART0	0x4000 3000
8	UART1	0x4000 3400
9	UART2	0x4000 3800
10	UART3	0x4000 3C00
11	SPI0	0x4000 4000
12	SPI1	0x4000 4400
13	I2C	0x4000 4800
14	PWMx (PWM4~PWM11)	0x4000 5000
15	LCD	0x4000 6000
16	USBFS	0x4000 8000
17	USBHS	0x4000 9000
18	Radio: BLE	0x4000 C000

		0x4000 D000
19	NFC	0x4000 E000
20	LED	0x4000 F000

The following table shows the explanation of "Access" in the register description in the subsequent chapters:

Table 2-6 Description of access attributes

Abbreviation	Description
RF	Read only and the read value is fixed and not affected by reset.
RO	Read-only
WO	Write only, read value is 0 or invalid.
RZ	Read only, clear 0 automatically after reading.
WZ	Write then clear 0.
RW	Readable and writeable.
RW1Z	Readable, clear 0 if write 1.
WA	Write only and only in safe mode, read value is 0 or invalid.
RWA	Readable, write only in safe mode.

The following table explains the abbreviations used in subsequent chapters:

Table 2-6 Description of noun abbreviation

Abbreviation	Description
HSE	External high-frequency crystal oscillator clock source (32MHz recommended)
HSI	Internal high frequency RC clock oscillator (16MHz after calibration by application software)
LSE	External low-frequency crystal oscillator clock source (32KHz recommended)
LSI	Internal low-frequency RC clock oscillator source (32KHz after calibration when the application software is running)
CK32M	High-frequency clock source (32MHz by default)
T_{CK32M}	High frequency clock cycle (1/CK32M)
CK16M	High-frequency clock source (16MHz by default)
T_{CK16M}	High frequency clock cycle (1/CK16M)
CK32K	Low-frequency clock source (32KHz by default)
Fpll	PLL output clock (624MHz by default)
HCLK	System clock
Fsys	System clock frequency
Tsys	System clock cycle (1/Fsys)
RAM32K	32KB SRAM of high address
RAM96K	96KB SRAM of low address
USBFS	USB full-speed
USBHS	USB high-speed
0x	The data starting with it indicates a hexadecimal number
h	The data ending with it indicates a hexadecimal number
b	The data ending with it indicates a binary number

Chapter 3 Interrupt

The system has a built-in programmable fast interrupt controller (PFIC), which supports up to 256 interrupt vectors. The current system manages 24 peripheral interrupt channels and 16 core interrupt channels, and other interrupt sources are reserved.

3.1 Interrupt Controller

24 peripheral interrupts; each interrupt request has an independent trigger and maskable control bit, as well as a dedicated status bit.

1 non-maskable interrupt NMI.

Unique fast interrupt entry and exit mechanism, hardware automatic stacking and recovery, without instruction overhead.

Unique fast interrupt response mechanism, 4 channels programmable directly access interrupt vector addresses.

3.2 System Timer (SysTick)

The core provides a 32-bit counter (SysTick), supports HCLK or HCLK/8 as the time base, with higher priority.

3.3 Interrupt and Exception Vector

The following is the vector table.

Table 3-1 Interrupt vector table

No.	Priority	Priority Type	Name	Description	Address
0	-3	Fixed	Reset	Reset	0x0000_0000
1	-	-	-	Reserved	0x0000_0004
2	-2	Fixed	NMI	Non-maskable interrupt	0x0000_0008
3	-1	Fixed	EXC	Failures and exception interrupts of all types	0x0000_000C
4	-	-	-	Reserved	-
5	-1	Fixed	ECALL-M	Machine mode callback interrupt	0x0000_0014
6-7	-	-	-	Reserved	-
8	-1	Fixed	ECALL-U	User mode callback interrupt	0x0000_0020
9	-1	Fixed	BREAKPOINT	Breakpoint callback interrupt	0x0000_0024
10-11	-	-	-	Reserved	-
12	0	Settable	SysTick	SysTick timer	0x0000_0030
13	-	-	-	Reserved	-
14	1	Settable	SWI	Software interrupt	0x0000_0038
15	-	-	-	Reserved	0x0000_003C
16	2	Settable	TMR0	TMR0 timer 0 interrupt	0x0000_0040
17	3	Settable	GPIO_A	GPIO port PA interrupt	0x0000_0044

18	4	Settable	GPIO_B	GPIO port PB interrupt	0x0000_0048
19	5	Settable	SPI0	SPI0 interrupt	0x0000_004C
20	6	Settable	BLEB	LLE interrupt of wireless module	0x0000_0050
21	7	Settable	BLEL	BB interrupt of wireless module	0x0000_0054
22	8	Settable	USB	Full-speed USB interrupt	0x0000_0058
23	-	-	-	Reserved	0x0000_005C
24	10	Settable	TMR1	TMR1 timer 1 interrupt	0x0000_0060
25	11	Settable	TMR2	TMR2 timer 2 interrupt	0x0000_0064
26	12	Settable	UART0	UART0 interrupt	0x0000_0068
27	13	Settable	UART1	UART1 interrupt	0x0000_006C
28	14	Settable	RTC	Real-time clock interrupt	0x0000_0070
29	15	Settable	ADC	ADC and TouchKey interrupt	0x0000_0074
30	16	Settable	I2C	I2C interrupt	0x0000_0078
31	17	Settable	PWMX_SPI1	PWMX (PWM4~11) interrupt and SPI1 interrupt	0x0000_007C
32	18	Settable	TMR3	TMR3 timer 3 interrupt	0x0000_0080
33	19	Settable	UART2	UART2 interrupt	0x0000_0084
34	20	Settable	UART3	UART3 interrupt	0x0000_0088
35	21	Settable	WDOG_BAT	Watchdog timer interrupt/battery low voltage interrupt	0x0000_008C
36	22	Settable	NFC	NFC interrupt	0x0000_0090
37	23	Settable	USB2_DEVICE	High-speed USB device interrupt	0x0000_0094
38	24	Settable	USB2_HOST	High-speed USB host interrupt	0x0000_0098
39	25	Settable	LED	LED interrupt	0x0000_009C

3.4 Registers

3.4.1 PFIC Register Description

PFIC register base address: 0xE000E000

Table 3-2 PFIC registers

Name	Offset address	Description	Reset Value
R32_PFIC_ISR1	0x00	PFIC interrupt enable status register 1	0x0000032C
R32_PFIC_ISR2	0x04	PFIC interrupt enable status register 2	0x00000000
R32_PFIC_IPR1	0x20	PFIC interrupt pending status register 1	0x00000000
R32_PFIC_IPR2	0x24	PFIC interrupt pending status register 2	0x00000000
R32_PFIC_ITHRESDR	0x40	PFIC interrupt priority threshold configuration register	0x00000000
R32_PFIC_GISR	0x4C	PFIC interrupt global status register	0x00000000
R32_PFIC_IDCFGR	0x50	PFIC fast interrupt ID configuration register	0xXXXXXXXX
R32_PFIC_FIADDRR0	0x60	PFIC fast interrupt 0 address register	0xXXXXXXX0
R32_PFIC_FIADDRR1	0x64	PFIC fast interrupt 1 address register	0xXXXXXXX0
R32_PFIC_FIADDRR2	0x68	PFIC fast interrupt 2 address register	0xXXXXXXX0
R32_PFIC_FIADDRR3	0x6C	PFIC fast interrupt 3 address register	0xXXXXXXX0

R32_PFIC_IENR1	0x100	PFIC interrupt enable set register 1	0x00000000
R32_PFIC_IENR2	0x104	PFIC interrupt enable set register 2	0x00000000
R32_PFIC_IRER1	0x180	PFIC interrupt enable clear register 1	0x00000000
R32_PFIC_IRER2	0x184	PFIC interrupt enable clear register 2	0x00000000
R32_PFIC_IPSR1	0x200	PFIC interrupt pending set register 1	0x00000000
R32_PFIC_IPSR2	0x204	PFIC interrupt pending set register 2	0x00000000
R32_PFIC_IPRR1	0x280	PFIC interrupt pending clear register 1	0x00000000
R32_PFIC_IPRR2	0x284	PFIC interrupt pending clear register 2	0x00000000
R32_PFIC_IACTR1	0x300	PFIC interrupt activation status register 1	0x00000000
R32_PFIC_IACTR2	0x304	PFIC interrupt activation status register 2	0x00000000
R32_PFIC_IPRIORx	0x400	PFIC interrupt priority configuration register	0x00000000
R32_PFIC_SCTLR	0xD10	PFIC system control register	0x00000000

In user mode, global interrupt control is supported, please refer to the examples provided in evaluation board documentation.

Description about core interrupt control bit:

1. Reset, NMI, EXC, ECALL-M, ECALL-U and BREAKPOINT interrupts are always enabled by default.
2. NMI and EXC support interrupt suspend clear and set control (controlled by PFIC_IPSR1 and PFIC_IPRR1), but do not support interrupt enable set and clear control.
3. Reset, ECALL-M, ECALL-U and BREAKPOINT do not support interrupt suspend clear and set control, interrupt enable set and clear control.

PFIC Interrupt Enable Status Register 1 (R32_PFIC_ISR1)

Bit	Name	Access	Description	Reset value
[31:12]	INTENSTA	RO	31# and below interrupts current enable status. 1: Enable the current number interrupt; 0: Disable the current number interrupt.	0
[11:0]	Reserved	RO	Reserved. Reset, NMI, EXC, ECALL and other interrupts bit, the same below.	32Ch

PFIC Interrupt Enable Status Register 2 (R32_PFIC_ISR2)

Bit	Name	Access	Description	Reset value
[31:8]	Reserved	RO	Reserved	0
[7:0]	INTENSTA	RO	32# and above interrupts current enable status. 1: Enable the current number interrupt; 0: Disable the current number interrupt.	0

PFIC Interrupt Pending Status Register 1 (R32_PFIC_IPR1)

Bit	Name	Access	Description	Reset value
[31:0]	PENDSTA	RO	31# and below interrupts current pending status. 1: Current number interrupt has been pending; 0: Current number interrupt is not pending.	0

PFIC Interrupt Pending Status Register 2 (R32_PFIC_IPR2)

Bit	Name	Access	Description	Reset value
[31:8]	Reserved	RO	Reserved	0
[7:0]	PENDSTA	RO	32# and above interrupts current pending status. 1: Current number interrupt has been pending; 0: Current number interrupt is not pending.	0

PFIC Interrupt Priority Threshold Configuration Register (R32_PFIC_ITHRESDR)

Bit	Name	Access	Description	Reset value
[31:8]	Reserved	RO	Reserved	0
[7:0]	THRESHOLD	RW	Interrupt priority threshold setting value. If the interrupt priority value is lower than the current setting value, interrupt service will not be performed when suspended. When this register is 0, the threshold register function is invalid. [7:5]: Priority threshold. [4:0]: Reserved; 0 constantly; invalid if writing.	0

PFIC Interrupt Global Status Register (R32_PFIC_GISR)

Bit	Name	Access	Description	Reset value

[31:14]	Reserved	RO	Reserved	0
13	CPU_LOCK_STA	RO	The current core is locked: 1: Locked; 0: Not locked.	0
12	CPU_DBG_MODE	RO	The current core is in the debug state: 1: Debugging; 0: Non-debugging.	0
11	CPU_GL0BL_IE	RO	Global interrupt enable: 1: Enable interrupt; 0: Disable interrupt.	0
10	Reserved	RO	Reserved	0
9	GPENDSTA	RO	Whether there is interrupt pending currently: 1: Yes; 0: No.	0
8	GACTSTA	RO	Whether the interrupt is executed currently: 1: Yes; 0: No.	0
[7:0]	NESTSTA	RO	Current interrupt nesting status, support 2-level nesting currently, [1:0] valid. 3: Level 2 interrupt in process; 1: Level 1 interrupt in process; 0: No interrupt occurs; Others: Impossible condition.	0

PFIC Fast Interrupt ID Configuration Register (R32_PFIC_IDCFGR)

Bit	Name	Access	Description	Reset value
[31:24]	FIID3	RW	Configure interrupt number of fast interrupt 3.	X
[23:16]	FIID2	RW	Configure interrupt number of fast interrupt 2.	X
[15:8]	FIID1	RW	Configure interrupt number of fast interrupt 1.	X
[7:0]	FIID0	RW	Configure interrupt number of fast interrupt 0.	X

PFIC Fast Interrupt 0 Address Register (R32_PFIC_FIADDRR0)

Bit	Name	Access	Description	Reset value
[31:1]	ADDR0	RW	Fast interrupt 0 service program address bit[31:1], bit0 is 0.	X
0	FI0EN	RW	Fast interrupt 0 channel enable bit: 1: Enable fast interrupt 0 channel; 0: Disable.	0

PFIC Fast Interrupt 1 Address Register (R32_PFIC_FIADDRR1)

Bit	Name	Access	Description	Reset value
[31:1]	ADDR1	RW	Fast interrupt 1 service program address bit[31:1], bit0 is 0.	X
0	FI1EN	RW	Fast interrupt 1 channel enable bit: 1: Enable fast interrupt 1 channel; 0: Disable.	0

PFIC Fast Interrupt 2 Address Register (R32_PFIC_FIADDRR2)

Bit	Name	Access	Description	Reset value
[31:1]	ADDR2	RW	Fast interrupt 2 service program address bit[31:1], bit0 is 0.	X
0	FI2EN	RW	Fast interrupt 2 channel enable bit: 1: Enable fast interrupt 2 channel; 0: Disable.	0

PFIC Fast Interrupt 3 Address Register (R32_PFIC_FIADDRR3)

Bit	Name	Access	Description	Reset value
[31:1]	ADDR3	RW	Fast interrupt 3 service program address bit[31:1], bit0 is 0.	X
0	FI3EN	RW	Fast interrupt 3 channel enable bit: 1: Enable fast interrupt 3 channel; 0: Disable.	0

PFIC Interrupt Enable Set Register 1 (R32_PFIC_IENR1)

Bit	Name	Access	Description	Reset value
[31:12]	INTEN	WO	31# and below interrupts enable. 1: Enable the current number interrupt; 0: No effect.	0
[11:0]	Reserved	RO	Reserved	0

PFIC Interrupt Enable Set Register 2 (R32_PFIC_IENR2)

Bit	Name	Access	Description	Reset value
[31:8]	Reserved	RO	Reserved	0
[7:0]	INTEN	WO	32# and above interrupts enable. 1: Enable the current number interrupt; 0: No effect.	0

PFIC Interrupt Enable Clear Register 1 (R32_PFIC_IRER1)

Bit	Name	Access	Description	Reset value
[31:12]	INTRESET	WO	31# and below interrupts enable. 1: Enable the current number interrupt; 0: No effect.	0
[11:0]	Reserved	RO	Reserved	0

PFIC Interrupt Enable Clear Register 2 (R32_PFIC_IRER2)

Bit	Name	Access	Description	Reset value
[31:8]	Reserved	RO	Reserved	0
[7:0]	INTEN	WO	32# and above interrupts enable. 1: Enable the current number interrupt; 0: No effect.	0

PFIC Interrupt Pending Set Register 1 (R32_PFIC_IPSR1)

Bit	Name	Access	Description	Reset value
[31:0]	PENDSET	WO	31# and below interrupts pending set. 1: Current number interrupt is pending; 0: No effect.	0

PFIC Interrupt Pending Set Register 2 (R32_PFIC_IPSR2)

Bit	Name	Access	Description	Reset value
[31:8]	Reserved	RO	Reserved	0
[7:0]	PENDSET	WO	32# and above interrupts pending set. 1: Current number interrupt is pending; 0: No effect.	0

PFIC Interrupt Pending Clear Register 1 (R32_PFIC_IPRR1)

Bit	Name	Access	Description	Reset value
[31:0]	PENDSET	WO	31# and below interrupts pending clear. 1: Current number interrupt is pending; 0: No effect.	0

PFIC Interrupt Pending Clear Register 2 (R32_PFIC_IPRR2)

Bit	Name	Access	Description	Reset value
[31:8]	Reserved	RO	Reserved	0
[7:0]	PENDSET	WO	32# and above interrupts pending clear. 1: Current number interrupt is pending; 0: No effect.	0

PFIC Interrupt Activation Status Register 1 (R32_PFIC_IACTR1)

Bit	Name	Access	Description	Reset value
[31:0]	IACTS	RO	31# and below interrupts activation status. 1: Executing the current number interrupt; 0: The current number interrupt is not executed.	0

PFIC Interrupt Activation Status Register 2 (PFIC_IACTR2)

Bit	Name	Access	Description	Reset value
[31:8]	Reserved	RO	Reserved	0
[7:0]	IACTS	RO	32# and above interrupts activation status. 1: Executing the current number interrupt; 0: The current number interrupt is not executed.	0

PFIC Interrupt Priority Configuration Register (R32_PFIC_IPRIORx) (x=0-63)

The controller supports 256 interrupts (0-255), and 8 bits are used to set the control priority for each interrupt.

	31 24	23 16	15 8	7 0
IPRIOR63	PRIO_255	PRIO_254	PRIO_253	PRIO_252

…	…	…	…	…
IPRIORx	PRIO_(4x+3)	PRIO_(4x+2)	PRIO_(4x+1)	PRIO_(4x)
…	…	…	…	…
IPRIOR0	PRIO_3	PRIO_2	PRIO_1	PRIO_0

Bit	Name	Access	Description	Reset value
[2047:2040]	IP_255	RW	Same as IP_0 description.	0
…	…	…	…	…
[31:24]	IP_3	RW	Same as IP_0 description.	0
[23:16]	IP_2	RW	Same as IP_0 description.	0
[15:8]	IP_1	RW	Same as IP_0 description.	0
[7:0]	IP_0	RW	Number 0 interrupt priority configuration: [7:5]: Priority control bit. The smaller priority value means higher priority. Only 2-level nested interrupts, i.e., it can be only preempted once. [7:5] are preempted bits. [4:0]: Reserved. Always 0. Invalid if writing.	0

PFIC System Control Register (R32_PFIC_SCTLR)

Bit	Name	Access	Description	Reset value
31	SYSRESET	WO	System reset. Cleared to 0 automatically. Valid when writing 1, while invalid when writing 0.	0
[30:6]	Reserved	RO	Reserved	0
5	SETEVENT	WO	Set event to wake up the WFE.	0
4	SEVONPEND	RW	Setting a new interrupt into the pending state as a wakeup event allows you to wake up the system from after a WFE instruction, and if the WFE instruction is not executed, it will wake up the system immediately after the next execution of the instruction. 1: New interrupt enters the pending state as a wake-up event 0: New interrupt entering the pending state is not a wake-up event.	0
3	WFITOWFE	RW	The WFI command is executed as WFE. 1: The subsequent WFI command is deemed as WFE command; 0: No action.	0
2	SLEEPDEEP	RW	Low-power mode of control system: 1: deepsleep 0: sleep	0
1	SLEEPONEXIT	RW	The system status after controlled to exit the	0

			interrupt service program: 1: The system gets into low-power mode; 0: The system gets into the main program.	
0	Reserved	RO	Reserved	0

3.4.2 CSR Registers Defined by WCH

In RISC-V, some control and status registers (CSR) are defined, which are used to configure, mark and record run status. CSR registers belong to internal registers of the core, and have a dedicated 12-bit address apace. WCH devices not only provide standard registers defined in RISC-V architecture documentation, but also provide some registers defined by manufactures and the csr instruction is needed to access.

Note: Some CSR registers need to be accessed by the system in machine mode; accessing them in non-machine mode will cause the chip to enter an exception. Labeled as "MRW", they need to be accessed by the system in machine mode; labeled as "MRO", they are read-only in machine mode.

Interrupt System Control Register (INTSYSCR)

CSR address: 0x804

Bit	Name	Access	Description	Reset value
[31:6]	Reserved	RO	Reserved	0x380
[5]	HM_POP_OFF	RW	Single exit stack masking function, exit interrupt automatically cleared: 1: Mask hardware stack on next exit interrupt; 0: Hardware out of the stack function is normal.	0
[4:2]	Reserved	RO	Reserved	0
1	INESTEN	RO	Interrupt nesting enable, the fixed value is 1. 1: Enable; 0: Disable.	1
0	HWSTKEN	RW	Hardware stack function enable. 1: Enable; 0: Disable.	0

Note: The interrupt nesting feature is turned on and off, controlled by bit NEST_LVL of register INESTCR.

User access to Machine Status Register (USER_ACCESS_MSTATUS)

CSR address: 0x800

Register function setting is the same as MSTATUS register.

Bit	Name	Access	Description	Reset value
[31:13]	Reserved	RO	Reserved	0
[12:11]	MPP	RO	Machine status at exit exception: 00: Machine status set to U mode when exiting an exception; 11: Machine status set to M mode when exiting an exception; 01: Reserved; 10: Reserved.	0
[10:8]	Reserved	RO	Reserved	0
7	MPIE	RW	When bit IE_REMAP_EN of register CORECFGR is	0

			enabled, this bit can be read and written in user mode.	
[6:4]	Reserved	RO	Reserved	0
3	MIE	RW	When bit IE_REMAP_EN of register CORECFGR is enabled, this bit can be read and written in user mode.	0
[2:0]	Reserved	RO	Reserved	0

Machine Status Register (MSTATUS)

CSR address: 0x300

Bit	Name	Access	Description	Reset value
[31:13]	Reserved	MRO	Reserved	0
[12:11]	MPP	MRW	Machine status at exit exception: 00: Machine status set to U mode when exiting an exception; 11: Machine status set to M mode when exiting an exception; 01: Reserved; 10: reserved.	0
[10:8]	Reserved	MRO	Reserved	0
7	MPIE	MRW	Global interrupt enabled after exiting interrupt (Updated to entry MIE value on entry interrupt): 1: Enable global interrupt after exiting interrupt; 0: Disable global interrupt after exiting interrupt.	0
[6:4]	Reserved	MRO	Reserved	0
3	MIE	MRW	Global interrupt enabled on entry to interrupt, (Updated to MPIE value on exit from interrupt): 1: Enable global interrupt; 0: Disable global interrupt.	0
[2:0]	Reserved	MRO	Reserved	0

Machine Trap-vector Base-address Register (MTVEC)

CSR address: 0x305

Bit	Name	Access	Description	Reset value
[31:2]	BASEADD	MRW	Interrupt vector table base address, where bits [9:2] are fixed to 0.	0
1	MODE1	MRW	Interrupt vector table recognize mode. 1: Recognize based on absolute address, support full range, but must jump; 0: Recognize based on jump instruction, limited range, support non-jump instruction.	0
0	MODE0	MRW	Interrupt or exception entry address mode select: 1: Offset address based on number*4; 0: Unified entry address.	0

Microprocessor Configuration Register (CORECFGR)

CSR address: 0XBC0

Bit	Name	Access	Description	Reset value
[31:8]	Reserved	MRO	Reserved	0
7	HF_NMI	MRW	Hardware error generates NMI: 1: When there is a hardware error, an NMI interrupt is generated 0: When there is a hardware error, an abnormal interrupt is generated; Note: Current hardware errors include only nested overflows.	0
6	Reserved	MRO	Reserved	0
5	IE_REMAP_EN	MRW	MIE register mapping enable: 1: Bits 3 and 7 of CSR address 0x800 are mapped to bit MIE of the MSTATUS register and bit MPIE of the MSTATUS register, respectively; 0: CSR address 0x800 is a read-only register and the return value is the value of the MSTATUS.	0
4	Reserved	MRO	Reserved	0
3	ROM_LOOP_ACC	MRW	ROM area instruction loop body acceleration enable: 1: Consecutive instructions with a loop body of 128 bytes or less will be fully accelerated, while consecutive instructions of 256 bytes or less will be partially accelerated; 0: Disable the ROM area loop acceleration function.	0
2	ROM_JUMP_ACC	MRW	ROM area instruction jump acceleration enable: 1. Enable ROM area instruction jump acceleration; 0: Disable ROM area instruction jump acceleration.	0
[1:0]	FETCH_MODE	MRW	Fetching mode: 00: Prefetch disabled. The instruction prefetch function is turned off to avoid invalid instruction fetching operation, and there is at most one valid instruction on the CPU pipeline. This mode has the lowest power consumption, and its performance drops by about 2 ~ 3 times. 01: Prefetch enabled. When the instruction prefetch function is turned on, the CPU will continue to access the instruction memory until the number of instructions to be executed in the internal instruction buffer exceeds a certain number, or the instruction buffer is full. This mode has high power consumption and strong performance. (Failure of CPU prediction will lead to redundant fetch	01b

			operation, and in some cases, the execution unit will introduce 0 ~ 2 cycles of bubbles, and the performance of most programs will not decrease obviously); Other: Reserved.	

Interrupt Nesting Control Register (INESTCR)

CSR address: 0XBC1

Bit	Name	Access	Description	Reset value
31	Reserved	MRO	Reserved	0
30	NEST_OVR	MRW	Hardware error interrupts nested overflow flag bit, and clears it by writing 1: 1: Interrupt overflow flag; 0: Interrupt did not overflow. *Note: Interrupt overflow will only occur when executing secondary interrupt service function to generate instruction exception and NMI interrupt. At this time, the exception and NMI interrupt enter normally, but the CPU stack overflows, so you cannot exit from this exception and NMI interrupt.*	0
[29:12]	Reserved	MRO	Reserved	0
[11:8]	NEST_STA	MRO	Nesting status flag bit: 0000: Non-interruption; 0001: 1-level interrupt; 0011: 2-level interrupt, (1-level nesting); 0111: 3-level interrupt, (2-level nesting, overflow)	0
[7:2]	Reserved	MRO	Reserved	0
[1:0]	NEST_LVL	MRW	Nesting level: 00: Nesting disabled, (Turn off nesting function); 01: 1-level nesting, (Turn on nesting function); 10: Unable to write; 11: Unable to write. *Note 1: Writing 10 or 11 to this field sets the register to 01;* *Note 2: When writing 11, read this register for the highest nesting level of the chip.*	0

3.4.3 Physical Memory Protection (PMP)

In order to improve system security, a set of physical address access privileges are defined in the RISC-V architecture, which can be used to set read/write/execute attribute of physical memory in the space and support regions as small as 4 bytes. PMP unit is always effective in user mode, and is optionally effective in machine mode. If the current memory restriction is violated, it may cause system exception interrupt (EXC).

PMP unit contains 4 sets of 8-bit configuration registers (in total 32 bits) and 4 sets of address registers, which need csr instruction to access and the registers must be in machine mode.

PMP Configuration Register (PMPCFG0)

CSR address: 0x3A0

Bit	Name	Access	Description	Reset value
[31:24]	pmp3cfg	MRW	See pmp0cfg.	0
[23:16]	pmp2cfg	MRW	See pmp0cfg.	0
[15:8]	pmp1cfg	MRW	See pmp0cfg.	0
[7:0]	pmp0cfg	MRW	<table><tr><th>Bit</th><th>Name</th><th>Description</th></tr><tr><td>7</td><td>L</td><td>Lock enabled, only reset can unlock: 1. Lock related registers; 0: Not locked.</td></tr><tr><td>[6:5]</td><td>-</td><td>Reserved</td></tr><tr><td>[4:3]</td><td>A</td><td>Address alignment and protection area range selection.</td></tr><tr><td>2</td><td>X</td><td>Execute.</td></tr><tr><td>1</td><td>W</td><td>Write.</td></tr><tr><td>0</td><td>R</td><td>Read.</td></tr></table>	0

Address alignment and protection region range select, memory protection for the region, A_ADDR ≤ region< B_ADDR (A_ADDR and B_ADDR are required to be 4 bytes aligned):

1. If B_ADDR - A_ADDR == 2^2, select NA4;
2. If B_ADDR - A_ADDR == $2^{(G+2)}$, G ≥ 1, and A_ADDR is $2^{(G+2)}$ aligned, select NAPOT;
3. Otherwise select TOR.

A value	Method	Description
0	OFF	No region to be protected
1	TOR	Top alignment region protection: region = BUS_ADDR >> 2; Under pmp0cfg, 0≤region<pmpaddr0; Under pmp1cfg, pmpaddr0≤region<pmpaddr1; Under pmp2cfg, pmpaddr1≤region<pmpaddr2; Under pmp3cfg, pmpaddr2≤region<pmpaddr3. $pmpaddr_{i-1}$ = A_ADDR >> 2; $pmpaddr_i$ = B_ADDR >> 2.
2	NA4	Fixed 4-byte region protection. pmp0cfg~pmp3cfg correspond to pmpaddr0~pmpaddr3 as start address. $pmpaddr_i$ = A_ADDR >> 2.
3	NAPOT	$2^{(G+2)}$ region protection, G≥1, and A_ADDR is $2^{(G+2)}$ aligned. $pmpaddr_i$ = (A_ADDR >> 2) | ($2^{(G-1)}$ – 1).

PMP Address 0 Register (PMPADDR0)

CSR address: 0x3B0

Bit	Name	Access	Description	Reset value

[31:0]	ADDR0	MRW	Bit[33:2] of PMP address 0. Actually, the higher 2 bits are not used.	XXXXh

PMP Address 1 Register (PMPADDR1)

CSR address: 0x3B1

Bit	Name	Access	Description	Reset value
[31:0]	ADDR1	MRW	Bit[33:2] of PMP set address 1. Actually, the higher 2 bits are not used.	XXXXh

PMP Address 2 Register (PMPADDR2)

CSR address: 0x3B2

Bit	Name	Access	Description	Reset value
[31:0]	ADDR2	MRW	Bit[33:2] of PMP set address 2. Actually, the higher 2 bits are not used.	XXXXh

PMP Address 3 Register (PMPADDR3)

CSR address: 0x3B3

Bit	Name	Access	Description	Reset value
[31:0]	ADDR3	MRW	Bit[33:2] of PMP set address 3. Actually, the higher 2 bits are not used.	XXXXh

3.4.4 SysTick Register Description

STK register base address: 0xE000F000

Table 3-3 STK registers

Name	Offset address	Description	Reset value
R32_STK_CTRL	0x00	System count control register	0x00000000
R32_STK_SR	0x04	System count status register	0x00000000
R32_STK_CNTL	0x08	System counter low register	0x00000000
R32_STK_CMPLR	0x10	Count reloaded low register	0x00000000

System Count Control Register (STK_CTRL)

Bit	Name	Access	Description	Reset value
[31:5]	Reserved	RO	Reserved	0
4	MODE	RW	Count mode: 1: Downcount; 0: Upcount.	0
3	STRE	RW	Auto reload count enable: 1: Count from 0 after upcounting to comparison value, downcount from comparison value after downcounting to 0; 0: Continue upcounting/downcounting.	0
2	STCLK	RW	Counter clock source select: 1: HCLK as timebase; 0: HCLK/8 as timebase.	0

1	STIE	RW	Counter interrupt enable control bit: 1: Enable counter interrupt; 0: No counter interrupt.	0
0	STE	RW	System counter enable control bit: 1: Enable system counter STK; 0: Disable system counter STK, the counter stops counting.	0

System Count Status Register (STK_SR)

Bit	Name	Access	Description	Reset value
31	Reserved	RW	Software interrupt (SWI) trigger enable: 1: Trigger software interrupt; 0: Turn off the trigger. *Note: This bit must be cleared after entering the software interrupt, otherwise it will always trigger.*	0
[30:1]	Reserved	RO	Reserved	0
0	CNTIF	RW0	Count value compare flag, cleared when writing 0, while invalid when writing 1: 1: Upcount to comparison value, downcount to 0; 0: Not reach the comparison value.	0

System Counter Low Register (STK_CNTL)

Bit	Name	Access	Description	Reset value
[31:0]	CNTL	RW	STK counter count value lower 32 bits.	XXXXXXXXh

Count Reloaded Low Register (STK_CMPLR)

Bit	Name	Access	Description	Reset value
[31:0]	CMPL	RW	Set reloaded counter value lower 32 bits.	XXXXXXXXh

3.4.5 Hardware Breakpoint Setting

The processor supports 4-channel instruction address and data address breakpoints, in which the fixed value of bit TYPE in the TDATA1 register is 2, while other bits in the TDATA1 register conform to the definition of mcontrol in the debugging standard, and support four-channel breakpoints at most. The lower 2 bits of the TSELECT trigger are valid, and the breakpoint channel is selected by the value of the TSELECT register, and then the breakpoint address and control information are configured.

Breakpoint Channel Selection Register (TSELECT)

CSR address: 0x7A0

Bit	Name	Access	Description	Reset value
[31:2]	Reserved	MRO	Reserved	0
[1:0]	TSELECT	MRW	The breakpoint channel selection register, selects the corresponding channel after configuration, and the TDATA1 and TDATA2 registers can be operated to configure breakpoint information.	X

Breakpoint Channel Control Register (TDATA1) (Power-on reset)

CSR address: 0x7A1

Bit	Name	Access	Description	Reset value
[31:28]	TYPE	MRO	Breakpoint type definition, mcontrol type.	0010b
[27]	DMODE	MRO	Only debug mode can modify the relevant registers of the flip-flop.	1
[26:21]	MASKMAX	MRO	When MATCH=1, the maximum exponential power range of allowable matching, that is, the maximum allowable matching range of 2^{31} bytes.	011111b
[20:13]	Reserved	MRO	Reserved	0
12	ACTION	MRW	Set the processing mode to be adopted when a breakpoint is triggered: 1: Enter debugging mode when triggered; 0: Enter the breakpoint callback interrupt when triggered.	0
[11:8]	Reserved	MRO	Reserved	0
7	MATCH	MRW	Matching policy configuration: 1: Match when the trigger value is equal to the high m bit of TDATA2, where m = 31–n, where n is the index of the first 0 of TDATA2 (Starting from the low bit); 0: Match when the trigger value is equal to TDATA2.	0
6	M	MRW	Trigger enable in M mode: 1: Enable; 0: Disable.	0
3	U	MRW	Trigger enable in U mode: 1: Enable; 0: Disable.	0
2	EXECUTE	MRW	Instruction read address trigger enable: 1: Enable; 0: Disable.	0
1	STORE	MRW	Data write address trigger enable: 1: Enable; 0: Disable.	0
0	LOAD	MRW	Data read address trigger enable: 1: Enable; 0: Disable.	0

Breakpoint Channel Address Register (TDATA2)

CSR address: 0x7A2

Bit	Name	Access	Description	Reset value
[31:0]	TDATA2	MRW	Used to save matching values.	X

Chapter 4 System Control

4.1 Reset Control

The system supports 6 types of resets, including Real Power on Reset (RPOR), external Manual Reset (MR), internal Software Reset (SR), Watch-dog Timeout Reset (WTR), Global Reset by Waking under Shutdown Mode (GRWSM) and Local Reset by Waking (LRW).

The R8_GLOB_RESET_KEEP register and the RB_ROM_CODE_OFS register are reset only when RPOR or GRWSM occurs, and are not affected by other types of resets.

Please refer to the timing parameter table in Section 20.5 for the timing parameters and reset property parameters in the figure below.

4.1.1 Real Power on Reset (RPOR)

When the power is on, the POR module inside the chip will generate a power-on reset and delay to wait for the power to stabilize. In addition, during operation, when the power voltage is lower than Vlvr, the internal LVR module of the chip will generate a low voltage reset until the voltage rises, and delay to wait for the power to stabilize. The figure below shows the power-on reset process and the low-voltage reset process.

Figure 4-1 Real power on reset

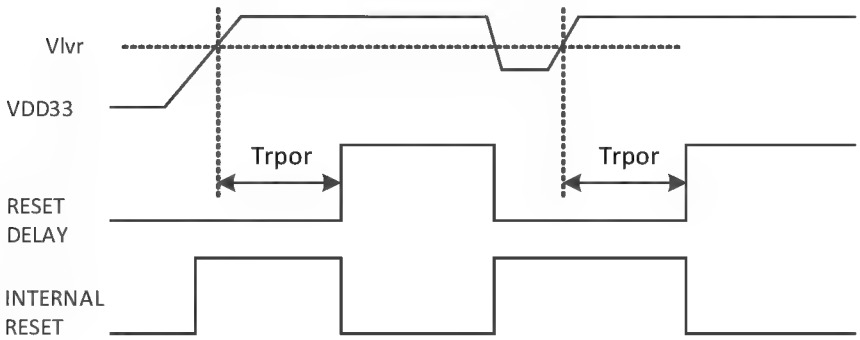

4.1.2 External Manual Reset (MR)

The external manual reset is triggered by a low level externally added to the RST pin. When the duration of reset low level is greater than the minimum reset pulse width (Trst), the system is triggered to reset.

Figure 4-2 External manual reset

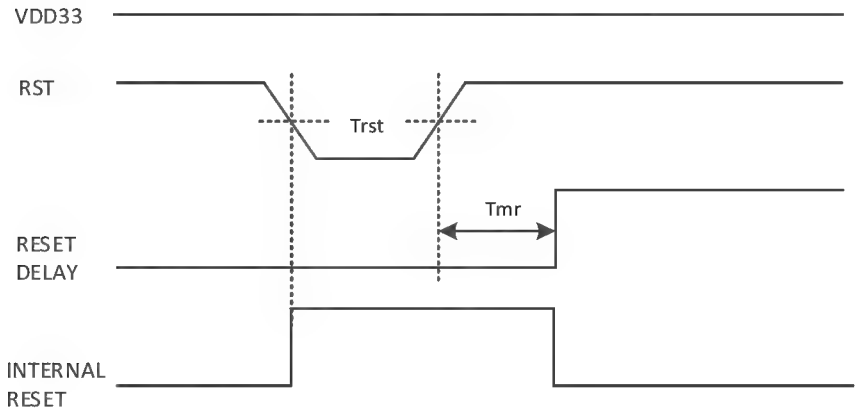

4.1.3 Internal Software Reset (SR)

Internal software reset is automatically carried out without external intervention. Set the bit RB_SOFTWARE_RESET of global reset configuration register (R8_RST_WDOG_CTRL) to 1, to realize software reset. This bit will be automatically cleared to 0.

4.1.4 Watchdog Timeout Reset (WTR)

Watchdog Timeout Reset (WTR) is based on an 8-bit incremental counter with a count clock period of 131072/Fsys. When Watchdog Timeout Reset is enabled, the entire system will be reset once this counter overflows.

4.1.5 Global Reset by Waking under Shutdown Mode (GRWSM)

Once the system enters the shutdown mode (See the power management chapter for details), the system will perform the wake-up operation in an orderly manner under the action of the wake-up signal, and the system will perform a global reset after wake-up. This reset effect is similar to that of power-on reset.

4.1.6 Local Reset by Waking (LRW)

If the system is awakened from sleep mode, a reset will be generated after the associated power is ready. It is a partial reset, with a selective reset of the registers that are powered down in sleep mode as needed.

In sleep mode, the registers of each functional module are divided into 3 categories:

The first type is the key registers belonging to the functional module that requires data retention (Such as configuration/mode, etc.). At the time of sleep, the auxiliary power continues to supply power, and the data is not lost, both sleep and wake-up have no effect on data;

The second type is the regenerative registers belonging to the functional module that requires data retention (Such as counters, FIFOs, etc.). The power is turned off during sleep, and the data is a random number (Such as FIFO memory cell) or reset (Such as FIFO counter) after waking up;

The third type is the register belonging to the functional module that does not require data retention. The power is turned off during sleep, and the data is a random number (Such as FIFO memory cell) or reset (Such as FIFO counter, configuration/mode register) after waking up.

LRW is used for the latter 2 reset registers above.

4.2 Safe Access

The attributes of some registers of the system are "RWA" or "WA", indicating that the current register can be safely accessed and can be read directly, but needs to enter the safe access mode when write-in:

First write 0x57 to the R8_SAFE_ACCESS_SIG register;

Then write 0xA8 to the R8_SAFE_ACCESS_SIG register;

At this time, you can enter the safe access mode and operate the registers with the attribute "RWA/WA". After that, about 16 system frequency cycles (Tsys) are in safe mode, and one or more secure registers can be rewritten within the valid period. The safe mode will be automatically terminated after the above validity period is exceeded. Or you can write 0x00 in the R8_SAFE_ACCESS_SIG register in advance to terminate the safe mode.

4.3 Register Description

Table 4-1 System control registers

Name	Access address	Description	Reset value
R8_SAFE_MODE_CTRL	0x40001010	Safe access mode control register	0x01
R8_SAFE_CLK_CTRL	0x40001011	Safe access clock control register	0x00
R8_SAFE_DEBUG_CTRL	0x40001012	Safe access debug control register	0x00
R8_SAFE_LRST_CTRL	0x40001013	Safe access long-time reset control register	0x00
R8_SAFE_ACCESS_SIG	0x40001040	Safe access sign register	0xX2
R8_CHIP_ID	0x40001041	Chip ID register	0x93/0x92/0x90
R8_SAFE_ACCESS_ID	0x40001042	Safe access ID register	0x0C
R8_WDOG_COUNT	0x40001043	Watchdog counter register	0x00
R8_RESET_STATUS	0x40001044	Reset status register	0x01
R8_GLOB_ROM_CFG	0x40001044	FlashROM application configuration register	0x01
R8_GLOB_CFG_INFO	0x40001045	Global configuration information status register	0xX8
R8_RST_WDOG_CTRL	0x40001046	Watchdog and reset configuration register	0x00
R8_GLOB_RESET_KEEP	0x40001047	Reset keep register	0x00
R32_FLASH_DATA	0x40001800	FlashROM word data register	0xXXXXXXXX
R32_FLASH_CONTROL	0x40001804	FlashROM control register	0x074000XX
R8_FLASH_DATA	0x40001804	FlashROM byte data register	0xXX
R8_FLASH_CTRL	0x40001806	FlashROM access control register	0x40
R8_FLASH_CFG	0x40001807	FlashROM access configuration register	0x07

Safe Access Mode Control Register (R8_SAFE_MODE_CTRL)

Bit	Name	Access	Description	Reset value
[7:5]	Reserved	RO	Reserved	0
4	RB_XROM_312M_SEL	RW	XROM clock selection:	0

			1: 312MHz; 0: 624MHz.	
[3:1]	Reserved	RO	Reserved	0
0	RB_SAFE_AUTO_EN	RW	Safe register auto-shutdown enable: 1: Enable; 0: Disable.	1

Safe Access Clock Control Register (R8_SAFE_CLK_CTRL)

Bit	Name	Access	Description	Reset value
[7:3]	Reserved	RO	Reserved	0
2	RB_CLK_OFF_LED	RWA	LED main frequency clock off enable: 1: Off 0: On.	0
1	RB_CLK_OFF_ADC	RWA	ADC main frequency clock off enable: 1: Off 0: On.	0
0	RB_CLK_OFF_NFC	RWA	NFC main frequency clock off enable: 1: Off 0: On.	0

Safe Access Debug Control Register (R8_SAFE_DEBUG_CTRL)

Bit	Name	Access	Description	Reset value
[7:5]	Reserved	RO	Reserved	0
4	RB_DEBUG_DIS	RWA	DEBUG off enable: 1: Off 0: On.	0
[3:0]	Reserved	RO	Reserved	0

Sefe Access Long-time Reset Control Register (R8_SAFE_LRST_CTRL)

Bit	Name	Access	Description	Reset value
[7:5]	Reserved	RO	Reserved	0
4	RB_IWDG_RST_EN	RWA	IWDG reset enable: 1: iwdg_rst perform power-on reset; 0: iwdg_rst perform global reset.	0
[3:2]	Reserved	RO	Reserved	0
1	RB_LONG_TIM_SEL	RWA	Long reset time selection: 1: 31ms; 0: 18ms.	0
0	RB_LONG_RST_EN	RWA	Long reset enable: 1: ON; 0: Off.	0

Safe Access Sign Control Register (R8_SAFE_ACCESS_SIG)

Bit	Name	Access	Description	Reset value
[7:0]	R8_SAFE_ACCESS_SIG	WO	Secure access sign register.。 Some of the registers (Access attribute is RWA) are protected registers and must enter the secure access mode to perform write operations. Write 0x57 and then	X2h

			0xA8 to this register to enter the secure access mode, and the time limit is about 112 (7*16) main clock cycles (Tsys), beyond which it is automatically protected. Any other value can be written to force the device to exit the secure access mode directly and return to the protected state.	
7	RB_CHIP_ID1	RO	Chip identification code, the reset value of which and the reset value of bit RB_CHIP_ID0 are used for chip identification. <table><tr><th>Chip type</th><th>RB_CHIP_ID1</th><th>RB_CHIP_ID0</th></tr><tr><td>CH585</td><td>1</td><td rowspan="2">1</td></tr><tr><td>CH584</td><td>0</td></tr></table>	X
[6:4]	RB_SAFE_ACC_TIMER	RO	Current safe access time count.	0
3	RB_SAFE_ACC_ACT	RO	Current secure access mode status: 1: Unlocked/writable in secure access mode; 0: Locked, RWA attribute register cannot be rewritten.	0
2	RB_CHIP_ID0	RO	Chip identification code, the reset value of which and the reset value of bit RB_CHIP_ID1 are used for chip identification.	1
[1:0]	RB_SAFE_ACC_MODE	RO	Current safe access mode status: 11: Safe mode, which can be written into the RWA register; Other: Non-secure mode.	0

Chip ID Register (R8_CHIP_ID)

Bit	Name	Access	Description	Reset value
[7:0]	R8_CHIP_ID	RF	CH585: Fixed value 93h, for chip identification. CH584: Fixed value 92h, for chip identification. CH585C: Fixed value 91h, for chip identification.	93h 92h 91h

Safe Access ID Register (R8_SAFE_ACCESS_ID)

Bit	Name	Access	Description	Reset value
[7:0]	R8_SAFE_ACCESS_ID	RF	Fixed value 0x0C.	0Ch

Watchdog Counter Register (R8_WDOG_COUNT)

Bit	Name	Access	Description	Reset value

[7:0]	R8_WDOG_COUNT	RW	Watchdog counter with preset initial value, which increases automatically all the time, can cycle from 0xFF to 0x00 and then continue. Counting period = 131072/Fsys.	0

Reset Status Register (R8_RESET_STATUS)/FlashROM Application Configuration Register (R8_GLOB_ROM_CFG)

Bit	Name	Access	Description	Reset value
[7:6]	RB_ROM_CODE_WE	RWA	Erase/program enable bit of FlashROM program storage area CodeFlash: X0: Write-protect all; 01: 129-240K allow erasing; 11: 0-240K allow erasing.	0
7	RB_ROM_CODE_WE	RWA	Erase/program enable bit of FlashROM code storage area CodeFlash (0-128K): 1: Allow erasing/programming; 0: This area is write-protected.	0
6	RB_ROM_DATA_WE	RWA	Erase/program enable bit of FlashROM data storage area CodeFlash (0-240K): 1: Allow erasing/programming; 0: This area is write-protected.	0
5	RB_ROM_CTRL_EN	RWA	FlashROM access control interface enabled: 1: Allow control; 0: No access	0
4	RB_ROM_CODE_OFS	RWA	Select the starting offset address of user program code in FlashROM, which is not affected by MR, SR, WTR or GRWSM, and can only be cleared when RPOR is valid: 1: 0x040000 (Skip the first 256KB in ROM); 0: 0x000000.	0
3	Reserved	RO	Reserved	0
[2:0]	RB_RESET_FLAG	RO	Last reset status: 000: Software reset SR (This state can be generated by software reset when RB_WDOG_RST_EN=0, otherwise it can be reset without generating this state); 001: Power-on reset RPOR; 010: Watchdog timeout reset; 011: External manual reset MR; 101: Reset GRWSM when waking up from power-down mode; 100/110/111: Wake-up reset LRW, and the	001b

			previous last reset was SR/WTR/MR respectively.	

Global Configuration Information Status Register (R8_GLOB_CFG_INFO)

Bit	Name	Access	Description	Reset value
[7:6]	Reserved	RO	Reserved	11b
5	RB_BOOT_LOADER	RO	Bootloader status: 1: Currently in Bootloader status; 0: Currently in user program status.	1/0
4	RB_CFG_DEBUG_EN	RO	Simulation debug interface enable: 1: Enable simulation and debug, and FlashROM can be read; 0: Disable simulation and debug.	0
3	RB_CFG_BOOT_EN	RO	System BootLoader enable status: 1: Enable; 0: Disable.	1
2	RB_CFG_RESET_EN	RO	RST# external manual reset enable status: 1: Enable; 0: Disable.	0
1	Reserved	RO	Reserved	0
0	RB_CFG_ROM_READ	RO	Code and data area protection status in FlashROM: 1: External programmer is readable; 0: Protected, externally inaccessible, and the program is kept secret.	0

Watchdog and Reset Configuration Register (R8_RST_WDOG_CTRL)

Bit	Name	Access	Description	Reset value
[7:5]	Reserved	RO	Reserved	000b
4	RB_WDOG_INT_FLAG	RW1Z	Watchdog timer interrupt flag: 1: Watchdog count overflows, that is, R8_WDOG_COUNT is detected to progressively increase from 0xFF to 0x00; 0: Watchdog count has not overflowed. Write 1 to clear, or reload the watchdog counter value (R8_WDOG_COUNT) to clear, or execute SETEVENT to clear.	0
3	Reserved	RO	Reserved	0
2	RB_WDOG_INT_EN	RWA	Watchdog timer interrupt enable bit: 1: Enable, an interrupt will be generated after the watchdog count overflows; 0: Disable the watchdog timer interrupt.	0
1	RB_WDOG_RST_EN	RWA	Watchdog timeout reset enable bit: 1: Enable, system is reset after the watchdog	0

			count overflows; 0: Only used as watchdog timer. *Note: After this bit is set to 1, the software reset operation will not affect the RB_RESET_FLAG status.*	
0	RB_SOFTWARE_RESET	WA/ WZ	System software reset control; automatically cleared after reset: 1: Perform system software reset; 0: Idle, no action.	0

Reset Keep Register (R8_GLOB_RESET_KEEP)

Bit	Name	Access	Description	Reset value
[7:0]	R8_GLOB_RESET_KEEP	RW	Reset keep register. The value of this register is not affected by manual reset, software reset, watchdog reset or ordinary wake-up reset.	0

For the operation or setting of FlashROM, please refer to related subprograms. This datasheet does not provide the introductions to FlashROM word data registers and FlashROM control registers.

4.4 Flash-ROM Operation Steps

1. Erase Flash-ROM, please refer to and call related subprograms.
2. Write Flash-ROM, please refer to and call the related subprograms.
3. Read Flash-ROM, read CodeFlash through the pointer to the program memory space; read DataFlash specific operation please refer to the example program.

4.5 Unique ID

Each chip has a unique ID (Chip identification number) when it is delivered from the factory. The ID data and its checksum are 8 bytes in total, stored in the read-only area of chip. Please refer to the routines for details.

Chapter 5 Power Control

5.1 Power Management

CH585 and CH584 has a built-in Power Management Unit (PMU). The system power is input from VDD33 to provide the FlashROM, digital circuits (Including core, USB, etc.) and analog circuits (Including high-frequency oscillator, PLL, ADC and RF transceiver) of system with the required power through the built-in multiple LDO voltage regulators. The power of GPIO and FlashROM is input from VIO33.

There are 2 types of power supply during normal work: direct power and DC-DC conversion. In addition to normal operation, CH585 and CH584 provide 4 low-power modes: Idle mode, suspend mode, sleep mode and power-off mode.

DC-DC is not enabled by default after power-on, but a direct power is provided, with a small voltage ripple. In order to reduce the system power consumption during normal operation, you can choose to enable DC-DC to increase the power consumption utilization rate, and the operating current will usually drop to about 60% of that when direct power is used.

In order to reduce the power consumption of the system during sleep, you can choose to turn off the main LDO of the system and switch to the built-in ultra-low power ULP-LDO of the system to provide the auxiliary power. When the system gets into sleep or power-down mode, in addition to power management and RTC registers and other normal power units, you can select whether to maintain the power supply of the high 32KB and low 96KB SRAM, core and all peripherals of system, and whether to enable LSE/LSI.

Figure 5-1 Power system

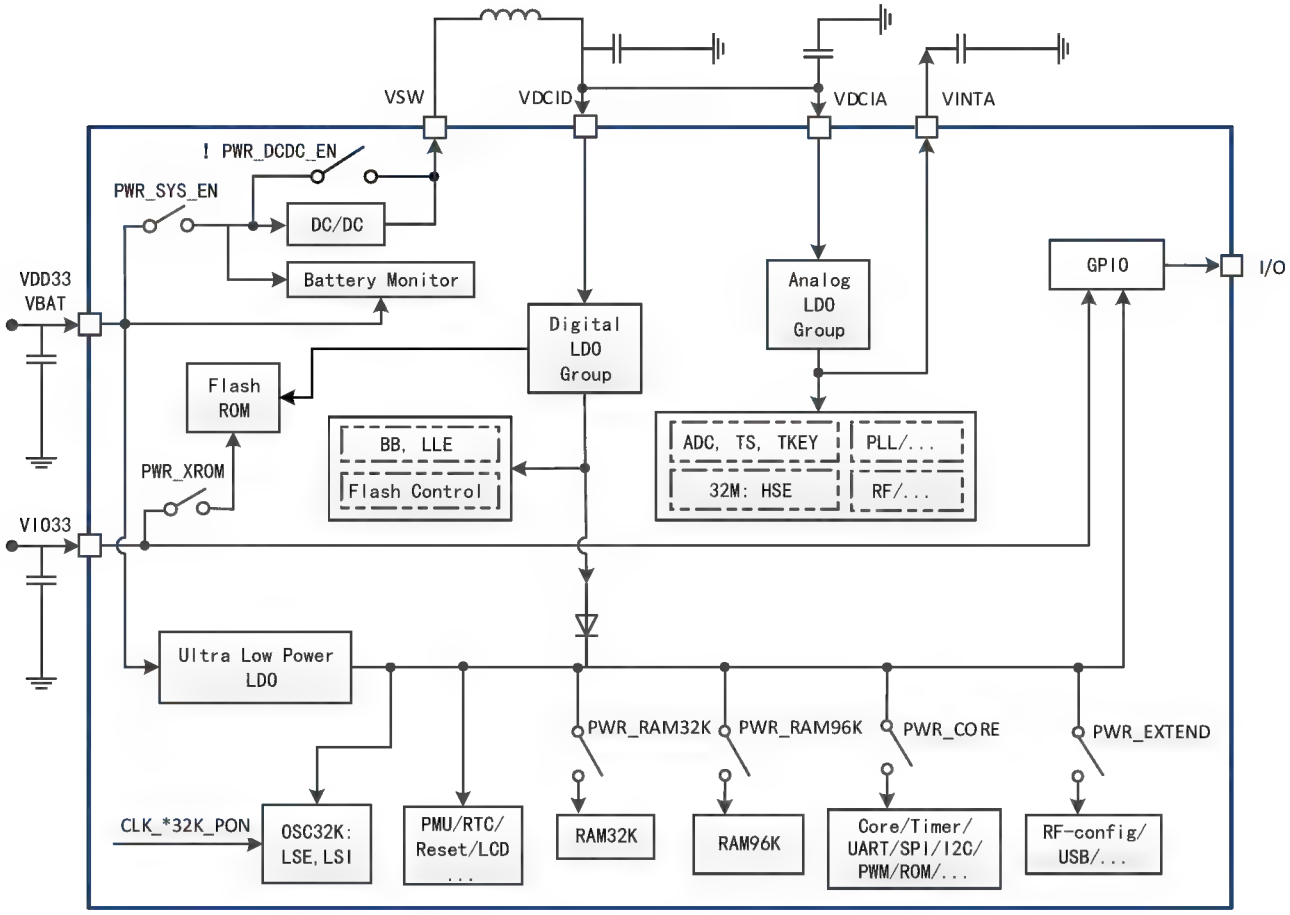

5.2 Register Description

Table 5-1 Power management registers

Name	Access address	Description	Reset value
R8_SLP_CLK_OFF0	0x4000100C	Sleep clock control register 0	0x00
R8_SLP_CLK_OFF1	0x4000100D	Sleep clock control register 1	0x00
R8_SLP_WAKE_CTRL	0x4000100E	Wakeup event configuration register	0x20
R8_SLP_POWER_CTRL	0x4000100F	Peripheral sleep power control register	0x00
R16_POWER_PLAN	0x40001020	Sleep power management register	0x11DF
R16_AUX_POWER_ADJ	0x40001022	Auxiliary power adjustment control register	0x0XXX
R8_BAT_DET_CTRL	0x40001024	Battery voltage detection control register	0x00
R8_BAT_DET_CFG	0x40001025	Battery voltage detection configuration register	0x02
R8_BAT_STATUS	0x40001026	Battery status register	0x00

Sleep Clock Control Register 0 (R8_SLP_CLK_OFF0)

Bit	Name	Access	Description	Reset value
7	RB_SLP_CLK_UART3	RWA	Clock source of UART3:	0

			1: Disable; 0: Enable.	
6	RB_SLP_CLK_UART2	RWA	Clock source of UART2: 1: Disable; 0: Enable.	0
5	RB_SLP_CLK_UART1	RWA	Clock source of UART1: 1: Disable; 0: Enable.	0
4	RB_SLP_CLK_UART0	RWA	Clock source of UART0: 1: Disable; 0: Enable.	0
3	RB_SLP_CLK_TMR3	RWA	Clock source of timer 3: 1: Disable; 0: Enable.	0
2	RB_SLP_CLK_TMR2	RWA	Clock source of timer 2: 1: Disable; 0: Enable.	0
1	RB_SLP_CLK_TMR1	RWA	Clock source of timer 1: 1: Disable; 0: Enable.	0
0	RB_SLP_CLK_TMR0	RWA	Clock source of timer 0: 1: Disable; 0: Enable.	0

Sleep Clock Control Register 1 (R8_SLP_CLK_OFF1)

Bit	Name	Access	Description	Reset value
7	RB_SLP_CLK_BLE	RWA	Clock source of BLE controller: 1: Disable; 0: Enable.	0
6	RB_SLP_CLK_LCD_	RWA	LCD clock source: 1: Disable; 0: Enable.	0
5	RB_SLP_CLK_USB2	RWA	Clock source of high-speed USB controller: 1: Disable; 0: Enable.	0
4	RB_SLP_CLK_USB	RWA	Clock source of full-speed USB controller: 1: Disable; 0: Enable.	0
3	RB_SLP_CLK_I2C	RWA	I2C clock source: 1: Disable; 0: Enable.	0
2	RB_SLP_CLK_PWMX	RWA	PWMx clock source: 1: Disable; 0: Enable.	0
1	RB_SLP_CLK_SPI1	RWA	SPI1 clock source: 1: Disable; 0: Enable.	0
0	RB_SLP_CLK_SPI0	RWA	SPI0 clock source: 1: Disable; 0: Enable.	0

Wakeup Event Configuration Register (R8_SLP_WAKE_CTRL)

Bit	Name	Access	Description	Reset value
7	RB_GPIO_WAKE_MODE	RWA	GPIO edge wakeup mode enable: 1: Edge Wakeup (depending on polarity); 0: Level Wakeup.	0
6	RB_WAKE_EV_MODE	RWA	Wake-up event internal memory mode enable: 1: Enable memory, support short-pulse	0

			event wake-up; 0: Disable memory, the event should remain valid until wake up.	
5	RB_SLP_BAT_WAKE	RWA	Enable battery low voltage event wake up system: 1: Enable; 0: Disable.	1
4	RB_SLP_GPIO_WAKE	RWA	Enable GPIO event wake up system: 1: Enable; 0: Disable.	0
3	RB_SLP_RTC_WAKE	RWA	Enable RTC event wake up system: 1: Enable; 0: Disable.	0
2	RB_GPIO_EDGE_WAKE	RWA	GPIO edge wake-up mode selection: 1: Any edge; 0: Edge to be configured according to polarity. *Note: Arbitrary edge is only supported for WFE.*	0
1	RB_SLP_USB2_WAKE	RWA	Enable high-speed USB event wake up system: 1: Enable; 0: Disable.	0
0	RB_SLP_USB_WAKE	RWA	Enable full-speed USB event wake up system: 1: Enable; 0: Disable.	0

Note: When multiple I/Os are configured for edge-wakeup, one of the I/Os generates a qualified wake-up signal, and the other configured I/Os must comply with the following conditions: if configured for rising edge-wakeup, it needs to be held low; if configured for falling edge-wakeup, it needs to be held high. Only at this time can it wake up normally.

Peripheral Sleep Power Control Register (R8_SLP_POWER_CTRL)

Bit	Name	Access	Description	Reset value
[7:6]	RB_RAM_RETENT_LV	RWA	Auxiliary power low voltage enabled during SRAM sleep: 00: Disable; 01: low-power mode 1; 10: low-power mode 2; 11: low-power mode 3.	0
5	RB_CLK_OFF_RAMR	RWA	SRAM clock control of RAM32K: 1: Disable; 0: Enable.	0
4	RB_CLK_OFF_RAMX	RWA	Clock control of main SRAM (RAM96K): 1: Disable; 0: Enable.	0
3	Reserved	RO	Reserved	0
2	RB_CLK_OFF_UTMI	RWA	Utmi_clk clock source: 1: Disable; 0: Enable.	0
[1:0]	RB_WAKE_DLY_MOD	RWA	Delay cycle select after wake-up: 11: No delay, 8 cycles +T_{SUCLK}, disabled;	0

			10: Ultra short delay, 70 cycles +T_{SUCLK}; 01: Short delay, 520 cycles +T_{SUCLK}, recommended; 00: Long delay, 3590 cycles +T_{SUCLK}. Where T_{SUCLK} depends on the sleep mode and clock configuration and may contain the start-up time of T_{SUHSE} or PLL or both combined, refer to the example in the evaluation board for the exact combination.	

Sleep Power Management Register (R16_POWER_PLAN)

Bit	Name	Access	Description	Reset value
15	RB_PWR_PLAN_EN	RWA/ WZ	Sleep power planning control enable: 1: Enable planning; 0: Disable or end planning. The power planning is enabled for execution when entering sleep or power-off mode later, and this bit is automatically cleared after execution.	0
[14:11]	RB_PWR_MUST_0010	RWA	Reserved, 0010b must be written.	0010b
10	RB_PWR_DCDC_PRE	RWA	DC-DC bias circuit enable (Effective immediately): 1: Enable; 0: Disable.	0
9	RB_PWR_DCDC_EN	RWA	DC-DC enable bit (Effective immediately): 1: Enable DC-DC, the direct power is off; 0: Disable DC-DC, the direct power is on.	0
8	RB_PWR_LDO_EN	RWA	Internal LDO control (Sleep planning): 1: Turn on LDO; 0: Plan to turn off LDO, saving more power.	1
7	RB_PWR_SYS_EN	RWA	System power control (Sleep planning): 1: Provide system power (on VSW pin); 0: Turn off the system power, plan to enter sleep mode or power-off mode.	1
6	Reserved	RWA	Reserved, 0 must be written.	1
5	Reserved	RO	Reserved	0
4	RB_PWR_RAM96K	RWA	SRAM power supply of RAM96K (sleep planning): 1: Dual power; 0: No auxiliary power.	1
3	RB_PWR_EXTEND	RWA	USB and RF configuration power supply (sleep planning): 1: Dual power; 0: No auxiliary power.	1
2	RB_PWR_CORE	RWA	Power of the core and basic peripherals (sleep planning):	1

			1: Dual power; 0: No auxiliary power.	
1	RB_PWR_RAM32K	RWA	SRAM power supply of RAM32K (sleep planning): 1: Dual power; 0: No auxiliary power.	1
0	RB_PWR_XROM	RWA	FlashROM power supply (sleep planning): 1: Continuous power; 0: Power off during sleep.	1

This register is preset for sleep planning except RB_PWR_DCDC_PRE and RB_PWR_DCDC_EN, and its power configuration will take effect after entering the low-power sleep mode and power-down mode.

Auxiliary Power Adjustment Control Register (R16_AUX_POWER_ADJ)

Bit	Name	Access	Description	Reset value
[15:12]	Reserved	RO	Reserved	0
[11:8]	Reserved	RO	Reserved, read-only. Write operation has no effect.	XXXXb
7	RB_DCDC_CHARGE	RWA	Low-power auxiliary DC-DC enable bit: 1: Auxiliary DC-DC enabled; 0: Auxiliary DC-DC disabled.	0
6	Reserved	RO	Reserved	0
[5:3]	Reserved	RWA	Reserved, the original value must be kept unchanged when writing.	1XXb
[2:0]	RB_ULPLDO_ADJ	RWA	The auxiliary power output voltage adjustment value of ultra-low power LDO (The value is for reference only, and it is not recommended to modify): 000: 0.77V; 001: 0.80V; 010: 0.84V; 011: 0.88V; 100: 0.91V; 101: 0.94V; 110: 0.99V; 111: 1.03V.	XXXb (010b)

Battery Voltage Detection Control Register (R8_BAT_DET_CTRL)

Bit	Name	Access	Description	Reset value
[7:4]	Reserved	RO	Reserved	0
3	RB_BAT_LOW_IE	RWA	Battery low voltage interrupt enable: 1: Enable; 0: Disable.	0
2	RB_BAT_LOWER_IE	RWA	Battery ultra-low voltage interrupt enable: 1: Enable; 0: Disable.	0
1	RB_BAT_MON_EN	RWA	Low-power battery voltage monitor function enable: 1: Enable, increasing about 1uA current; 0: Disable.	0
0	RB_BAT_LOW_VTHX	RWA	When RB_BAT_MON_EN=1, set the low-power low voltage monitoring threshold. Refer to RB_BAT_LOW_VTH.	0

0	RB_BAT_DET_EN	RWA	High-precision battery voltage detection function enable when RB_BAT_MON_EN=0 1: Enable, and turn on modules such as reference voltage simultaneously, and the current is 210uA in sleep mode; 0: Disable.	0

Note: If the battery voltage reaches the lower voltage detection threshold and both RB_BAT_LOWER_IE and RB_BAT_LOW_IE are enabled (Only one of them is enabled under normal conditions), NMI non-maskable interrupt will be generated, which is equivalent to increasing the interrupt priority.

Battery Voltage Detection Configuration Register (R8_BAT_DET_CFG)

Bit	Name	Access	Description	Reset value
[7:2]	Reserved	RO	Reserved	0
[1:0]	RB_BAT_LOW_VTH	RWA	When RB_BAT_MON_EN=0, set the high-precision ultra-low voltage and low voltage detection threshold: (ultra-low voltage reference threshold, low voltage reference threshold) 00: 1.7V, 1.95V; 01: 1.9V, 2.15V; 10: 2.1V, 2.35V; 11: 2.3V, 2.55V. When RB_BAT_MON_EN=1, take RB_BAT_LOW_VTHX as the highest bit, adding these 2 bits, these 3 bits are used to set the low-power low-voltage monitoring threshold: 000: 1.7V; 001: 1.8V; 010: 1.9V; 011: 2.0V; 100: 2.1V; 101: 2.2V; 110: 2.3V; 111: 2.4V.	10b

Battery Status Register (R8_BAT_STATUS)

Bit	Name	Access	Description	Reset value
[7:2]	Reserved	RO	Reserved	0
1	RB_BAT_STAT_LOW	RO	The result of battery low-voltage detection or low-voltage monitoring, indicating that the battery voltage is in low voltage status: 1: Below the low voltage threshold; 0: No.	0
0	RB_BAT_STAT_LOWER	RO	When RB_BAT_MON_EN=0, it indicates that battery voltage is in ultra-low voltage status:	0

			1: Below the ultra-low voltage threshold; 0: No.	

5.3 Low-power Mode

After the system is reset, the microcontroller is in normal operation. When the MCU does not need to run, an appropriate low-power mode can be selected to save power. The user needs to select an appropriate low-power mode based on conditions such as the lowest power consumption, the fastest startup time and available wake-up events.

The chip provides the following 4 main low-power modes:

- Idle mode

All peripherals remain powered, the core stops running, and the clock system is running. After a wake-up event is detected, it can be woken up immediately.

- Halt mode

On the basis of idle mode, the clock system stops. After a wake-up event is detected, the clock will run first, and then the core will be woken up to run.

- Sleep mode:

The main LDO is turned off, and the ultra-low power ULP-LDO maintains the power supply of PMU, core and basic peripherals. You can select whether to turn on LSE or LSI, and to maintain power supply of RAM32K, RAM96K, USB and RF configurations. After a wake-up event is detected, first the main LDO is turned on, then the clock will run, and finally the core will be woken up, the program will continue to run, and a higher frequency can be reset when needed.

- Shutdown mode:

Based on the sleep mode, the core and basic peripherals, USB and RF configurations are turned off, and you can select whether to turn on LSE or LSI, and to maintain power supply of RAM32K and RAM96K. After detecting a wake-up event, PMU will perform a GRWSM reset, and the software can distinguish RPOR based on the reset flag RB_RESET_FLAG and the data retained in optional RAM.

The following table describes in detail the characteristics and wake-up means in several low-power modes:

Table 5-2 Low-power modes

Mode	Feature	Entry condition	Wakeup event	Test condition	Power consumption(1)
Idle	The peripherals are powered normally, the core stops running, the clock system is running, but the clocks of each peripheral can be selected to turn off by the peripheral clock control bit.	Set SLEEPDEEP=0, execute WFI() or WFE() after setting the wake-up conditions.	I/O or RTC or BAT or USB or I2C or SysTick or SPI or TMR or UART or ADC	System frequency HSE=16MHz, FLASH chip select off, peripheral clock off	1.44mA
				System frequency HSI=16MHz, FLASH chip select off,	1.26mA

				peripheral clock off	
Halt	The peripherals are powered normally, the core stops running, the clock system stops (PLL/HSE). *Note: When RB_CLK_XT32M_KEEP = 1, the clock of each peripheral can be selected to be turned on by the peripheral clock control bit.*	Set SLEEPDEEP=1, execute WFI() or WFE() after setting the wake-up conditions.	I/O or RTC or BAT or USB	HSE=16MHz and RB_CLK_XT32M_KEEP = 1	1.01mA
				HSI=16MHz and RB_CLK_XT32M_KEEP = 1	0.8mA
				RB_CLK_XT32M_KEEP = 0	200uA
Sleep	The main LDO is off, and the ultra-low power ULP-LDO maintains power supply of PMU, core and basic peripherals, you can select whether to turn on LSE or LSI, and to maintain power supply of RAM2K, RAM24K, USB and RF configurations.	Set SLEEPDEEP=1, execute WFI() or WFE() after setting the wake-up conditions.	I/O or RTC or BAT. The chip will continue to run after woken up.	See Table 5-3 for details	2.6uA~8.2uA
Shut down	Ultra-low power consumption LDO maintains power supply of PMU, you can select whether to turn on LSE or LSI, and to maintain power supply of RAM32K and RAM96K for data retention.	Set SLEEPDEEP=1, set POWER_PLAN, execute WFI() or WFE() after setting the wake-up conditions.	I/O or RTC or BAT. The chip will automatically reset after woken up	See Table 5-3 for details	0.65uA~5.5uA

The following table describes the detailed configurations of several low-power modes:

Table 5-3 Detailed configuration example of low-power mode

Planning configuration	SYS_EN	RAM32K	RAM96K	CK32K	CORE	EXTEND	LCD	Power consumption(1) (for reference only)
Maintaining supply function	System power VSW	Data area 32KB	Data area 96KB	LSE/LSI RTC wake-up	CPU core and basic peripherals	USB and RF configurations	LCD segment display	PMU and RTC registers are always powered, about 0.3uA
Common configurations in shutdown mode	0	0	0	0	0	0	0	0.65uA
	0	1	0	0	0	0	0	2.2uA
	0	0	1	0	0	0	0	5.5uA
	0	0	0	1	0	0	0	1.2uA (LSI)

								1.1uA (LSE)
	0	1	0	1	0	0	0	2.8uA (LSI) 2.7uA (LSE)
Common configurations in sleep mode	0	1	0	0	1	0	0	2.6uA
	0	1	0	1	1	0	0	3.1uA (LSI) 3.0uA (LSE)
	0	0	1	0	1	0	0	6uA
	0	0	1	1	1	0	0	6.5uA (LSI) 6.3uA (LSE)
	0	1	1	1	1	1	0	8.2uA (LSI) 8.1uA (LSE)
	0	1	1	1	1	1	1	10uA(2)

Note: 1. Current parameters are measured at room temperature, note that the temperature changes lead to current changes;

*2. LCD set SCAN_CLK_SEL=128, LCD_DUTY=1/4, LCD_BIAS=1/3, LCD_RAM all for 1. LCD module sample test results at 25℃ is about 5uA; 0-50℃ is about 7uA, the worst is 12uA; -20-75℃ is about 17uA, the worst is 40uA. The power consumption of the 28*4 LCD screen is measured to be about 11uA.*

5.4 DC-DC Operation Steps

Enable DC-DC power mode (It is needed to confirm the inductance and capacitance required by DC-DC on the external hardware circuit before enabling)

(1) Enter safe access mode: First write 0x57 to the R8_SAFE_ACCESS_SIG register and then write 0xA8;

(2) Open DC-DC bias circuit: Set the RB_PWR_DCDC_PRE in the R16_POWER_PLAN register to 1;

(3) Delay about 10uS;

(4) Enter secure access mode: Register R8_SAFE_ACCESS_SIG is written to 0x57 first, then to 0xA8;

(5) Turn on the DC-DC power: Set the RB_PWR_DCDC_EN in the R16_POWER_PLAN register to 1, to enable DC-DC.

Disable DC-DC and switch to direct power mode

(1) Enter safe access mode: First write 0x57 to the R8_SAFE_ACCESS_SIG register and then write 0xA8;

(2) Clear the RB_PWR_DCDC_EN and RB_PWR_DCDC_PRE control bits in the R16_POWER_PLAN register.

Chapter 6 System Clock and RTC

6.1 Introduction to System Clock

The following different clock sources can be selected to drive the system clock HCLK (Fsys)

- Frequency division of HSE or HSI.
- Internal PLL clock source 2-divided (312MHz) for frequency division.
- HSE source clock CK32M or HSI source clock CK16M.
- LSE or LSI original clock CK32K.

Any clock source can be turned on/off independently, thereby optimizing system power consumption.

6.1.1 Clock Architecture

Figure 6-1 Clock tree block diagram

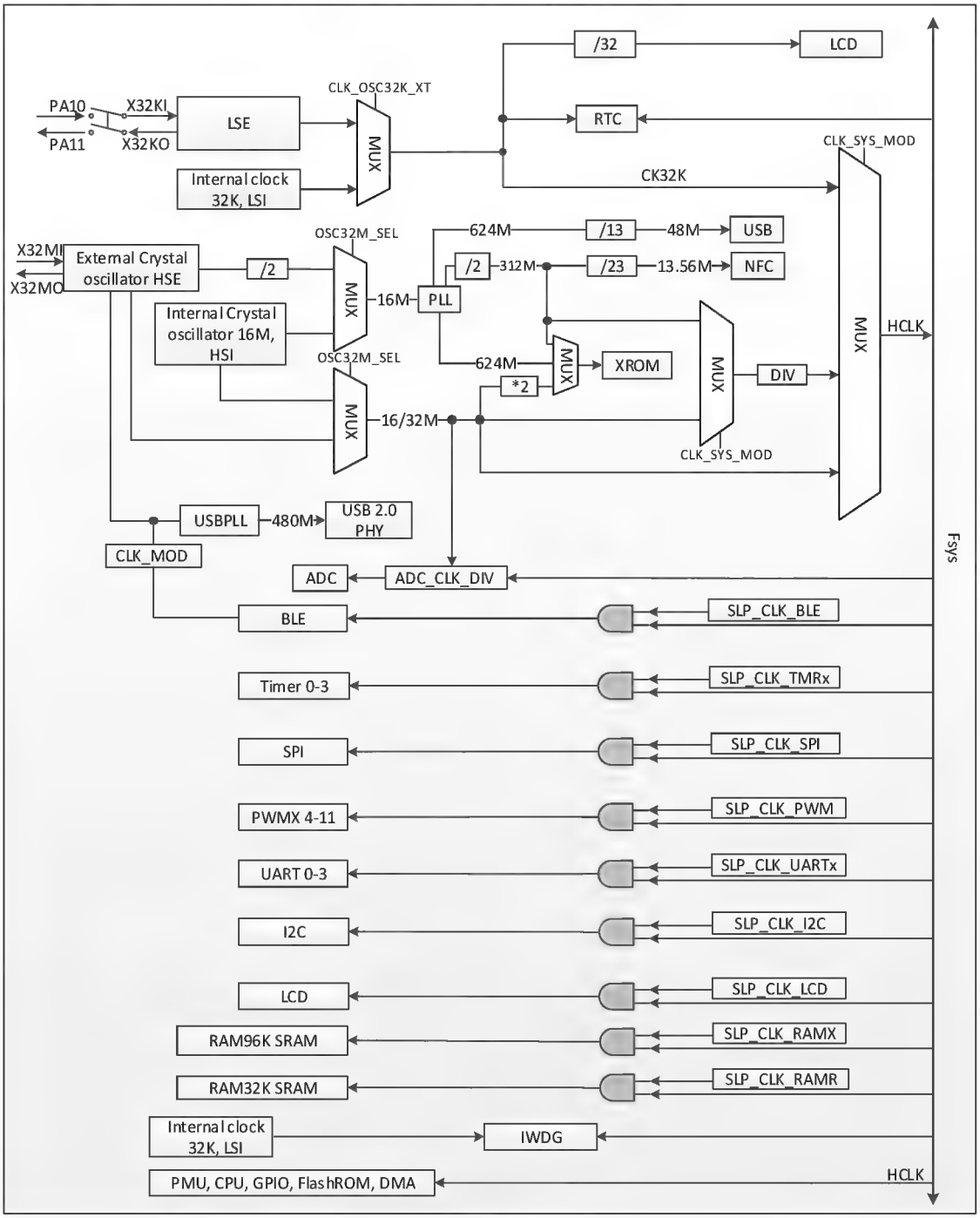

The figure above is the internal clock tree architecture of the system. The 32KHz clock source (CK32K) is selected for RTC function, so the low-frequency clock must be turned on when using these functions. USB data transfer depends on the clock source generated by PLL. Other peripheral driven clock and digital control logic are driven by the system clock or by frequency re-division.

6.2 Introduction to RTC

The Real-time Clock (RTC) is an independent timer that contains a set of counters that can count continuously. Under the corresponding software configuration, a simple calendar function is available. Reset the current time and date by modifying the value of counter.

The RTC register is powered as often as the PMU. After the system is reset or woken up from low-power mode, RTC setting and time remain unchanged.

6.2.1 Main Features

2 modes that can be configured:

- Timing mode: A fixed cycle time (timing) can be selected for the software to generate interrupt notifications.
- Trigger mode: Match a target alarm clock time preset by the software to generate an interrupt notification.

3 groups of 16-bit counters that provide count of CK32K primitive cycle, 2s cycle and 1-day cycle.

6.3 Register Description

Table 6-1 Clock and oscillator control registers

Name	Access address	Description	Reset value
R16_CLK_SYS_CFG	0x40001008	System clock configuration register	0x0003
R8_HFCK_PWR_CTRL	0x4000100A	High frequency clock module power control register	0x14
R16_INT32K_TUNE	0x4000102C	Internal 32KHz clock calibration register	0x1011
R8_XT32K_TUNE	0x4000102E	External 32KHz clock resonance control register	0xC7
R8_CK32K_CONFIG	0x4000102F	32KHz oscillator configuration register	0xX2
R8_XT32M_TUNE	0x4000104E	External 32MHz clock resonance tune register	0x02
R16_OSC_CAL_CNT	0x40001050	Oscillator frequency calibration count register	0xXXXX
R8_OSC_CAL_OV_CNT	0x40001052	Oscillator frequency calibration overflow number register	0x00
R8_OSC_CAL_CTRL	0x40001053	Oscillator frequency calibration control register	0x09
R8_PLL_CONFIG	0x4000104B	PLL configuration register	0x0A
R8_RTC_FLAG_CTRL	0x40001030	RTC flag and control register	0x30
R8_RTC_MODE_CTRL	0x40001031	RTC mode control register	0x02
R32_RTC_TRIG	0x40001034	RTC trigger value register	0x00000000
R16_RTC_CNT_32K	0x40001038	RTC based 32768Hz count value register	0xXXXXXXXX
R16_RTC_CNT_2S	0x4000103A	RTC count value register in the unit of 2S	0xXXXXXXXX
R32_RTC_CNT_DAY	0x4000103C	RTC count value register in the unit of day	0x0000XXXX

System Clock Configuration Register (R16_CLK_SYS_CFG)

Bit	Name	Access	Description	Reset value

[15:14]	Reserved	RO	Reserved	0
13	RB_PLL_GATE_TIME	RWA	When switching the PLL clock source, the time to turn off the PLL clock is selected: 1: 40us; 0: 30us.	0
12	RB_PLL_GATE_DISS	RWA	Whether to turn off the PLL clock when switching the PLL clock source: 1: On; 0: Off.	0
[11:10]	Reserved	RO	Reserved	0
9	RB_OSC32M_SEL	RWA	PLL clock source selection: 1: External 32MHz oscillator HSE; 0: Internal 16MHz oscillator HSI. *Note: It takes 1us to complete the switching.*	0
8	RB_XROM_SCLK_SEL	RWA	XROM clock sources: 1: PLL clock source (624MHz) or 2-divided frequency of PLL clock source (312MHz); 0: 2X frequency of 16MHz or 32MHz.	0
[7:6]	RB_CLK_SYS_MOD	RWA	HCLK system clock source mode selection: 00: CK32M or CK16M for frequency division; 01: 2-divided of PLL clock source (312MHz) for frequency division; 10: CK32M or CK16M as HCLK (default 16MHz); 11: CK32K (default 32KHz) as HCLK.	0
5	Reserved	RO	Reserved	0
[4:0]	RB_CLK_PLL_DIV	RWA	HCLK output clock frequency division factor, the minimum value is 2. 0 means the maximum value 32. Write 1 to disable HCLK.	00011b

Calculation:

Fck32m = XT_32MHz;

Fck16m = RC_16MHz;

Fck32k = RB_CLK_OSC32K_XT ? XT_32KHz : RC_32KHz;

Fpll = (RB_OSC32M_SEL ? Fck32m/2 : Fck16m) * 39 = 624MHz;

Fpll_div2 = Fpll/2 = 312MHz;

Fsys = RB_CLK_SYS_MOD[1] ? (RB_CLK_SYS_MOD[0] ? Fck32k : (RB_OSC32M_SEL ? Fck32m : Fck16m)) :

((RB_CLK_SYS_MOD[0] ? Fpll_div2 : (RB_OSC32M_SEL ? Fck32m : Fck16m)) / RB_CLK_PLL_DIV);

Power-on default value Fsys = Fck16m/ RB_CLK_PLL_DIV = 16MHz / 3 = 5.33MHz;

Fsys range:

Bit RB_CLK_SYS_MOD[1:0]	HCLK system clock source mode	Fsys range
11	CK32K	32KHz (Run in RAM)
00/10	CK32M or CK16M for frequency division/ CK32M or CK16M	1MHz~32MHz
01	PLL's 2-divided for frequency division	9.75MHz~78MHz

High Frequency Clock Module Power Control Register (R8_HFCK_PWR_CTRL)

Bit	Name	Access	Description	Reset value
[7:5]	Reserved	RO	Reserved	0
4	RB_CLK_PLL_PON	RWA	PLL power control bit: 1: Power-on; 0: Power-down.	1
3	RB_CLK_XT32M_KEEP	RWA	Used to control the stopping of the clock system in Halt mode: 1: HSE and PLL are not automatically stopped in Halt mode; 0: HSE and PLL are automatically stopped in Halt mode.	0
2	RB_CLK_XT32M_PON	RWA	External 32MHz oscillator HSE power control bits: 1: Power-on; 0: Power-down.	1
1	RB_CLK_RC16M_PON	RWA	Enable for internal 16MHz oscillator HSI: 1: On; 0: Off.	1
0	Reserved	RO	Reserved	0

Internal 32KHz Clock Tune Register (R16_INT32K_TUNE)

Bit	Name	Access	Description	Reset value
[15:13]	Reserved	RO	Reserved	0
[12:0]	RB_INT32K_TUNE	RWA	Internal RC 32KHz clock frequency calibration value.	1011h

External 32KHz Clock Resonance Tune Register (R8_XT32K_TUNE)

Bit	Name	Access	Description	Reset value
[7:4]	RB_XT32K_C_LOAD	RWA	Select the built-in load capacitor matching the external 32KHz crystal (Which may affect the RTC clock accuracy). Capacitance = RB_XT32K_C_LOAD + 12pF. 0000b~1111b correspond to approximately 12pF~27pF, respectively. Select according to the crystal parameters used.	1100b

[3:2]	RB_RC32K_I_TUNE	RWA	*RC32K adjustment bit, internal 32KHz oscillator bias current selection:* 00: 70% of rated current; 01: Rated current; 10: 140% of rated current; 11: 200% of rated current. *Note: The current can be changed to the rated current after the crystal oscillator is stable.*	01b
[1:0]	RB_XT32K_I_TUNE	RWA	External 32KHz oscillator bias current select: 00: 70% of rated current; 01: Rated current; 10: 140% of rated current; 11: 200% of rated current. *Note: The current can be changed to the rated current after the crystal oscillator is stable.*	11b

32KHz Oscillator Configuration Register (R8_CK32K_CONFIG)

Bit	Name	Access	Description	Reset value
7	RB_32K_CLK_PIN	RO	32KHz clock pin status (Asynchronous signal).	X
[6:4]	Reserved	RO	Reserved	0
3	RB_CLK_OSC32K_FILT	RWA	Internal 32KHz oscillator noise filter mode: 1: Enable; 0: Disable.	0
2	RB_CLK_OSC32K_XT	RWA	CK32K (32KHz) clock source select bit: 1: External 32KHz oscillator; 0: Internal 32KHz oscillator.	0
1	RB_CLK_INT32K_PON	RWA	Internal 32KHz oscillator power control bit: 1: Power on; 0: Power down.	1
0	RB_CLK_XT32K_PON	RWA	External 32KHz oscillator power control bit: 1: Power on; 0: Power down.	0

External 32MHz Clock Resonance Tune Register (R8_XT32M_TUNE)

Bit	Name	Access	Description	Reset value
[7:4]	RB_XT32M_C_LOAD	RWA	Select the built-in load capacitance that matches the external 32MHz crystal (May affect wireless communication): [7] = 0: Capacitance = RB_XT32M_C_LOAD*2 + 10pF; [7] = 1: capacitance = RB_XT32M_C_LOAD*2 + 2pF. Therefore, 0000b~0111b corresponds to about 10pF to 24pF, and 1000b~1111b corresponds to about 2pF to 16pF. Select according to the parameters of the crystal used, and 0111b is commonly used.	0

[3:2]	Reserved	RO	Reserved	0
[1:0]	RB_XT32M_I_BIAS	RWA	External 32MHz oscillator bias current selected: 00: 75% of rated current; 01: Rated current; 10: 125% of rated current; 11: 150% of rated current.	11b

Oscillator Frequency Calibration Count Register (R16_OSC_CAL_CNT)

Bit	Name	Access	Description	Reset value
15	RB_OSC_CAL_IF	RW1Z	Oscillator capture complete interrupt flag bit, write 1 to clear it: 1: Interrupt; 0: No interrupt.	0
14	RB_OSC_CAL_OV_CLR	RW1Z	R8_OSC_CAL_OV_CNT register value non-zero indicator, write 1 to clear R8_OSC_CAL_OV_CNT.	0
[13:0]	RB_OSC_CAL_CNT	RO	Count value based on system clock frequency of multiple CK32K cycles, used to calibrate internal 32KHz oscillator frequency.	XXXXh

Oscillator Frequency Calibration Overflow Count Register (R8_OSC_CAL_OV_CNT)

Bit	Name	Access	Description	Reset value
[7:0]	RB_OSC_CAL_OV_CNT	RO	Oscillator frequency calibration count overflow times, write 1 to RB_OSC_CAL_OV_CLR to clear this register.	0

Oscillator Frequency Calibration Control Register (R8_OSC_CAL_CTRL)

Bit	Name	Access	Description	Reset value
7	Reserved	RO	Reserved	0
6	RB_OSC_CNT_END	RWA	Oscillator capture end-point selection: 1: 2 additional cycles; 0: No.	0
5	RB_OSC_CNT_EN	RWA	Oscillator frequency calibration counter enable: 1: Enable counting; 0: Disable counting.	0
4	RB_OSC_CAL_IE	RWA	Oscillator capture complete interrupt enable: 1: Enable; 0: Disable.	0
3	RB_OSC_CNT_HALT	RO	Oscillator frequency calibration counter count status: 1: Counting is being paused; 0: Counting is in progress.	1
[2:0]	RB_OSC_CNT_TOTAL	RWA	Oscillator capture total cycle selection: 000: 1 cycle; 001: 2 cycles; 010: 4 cycles; 011: 32 cycles; 100: 64 cycles; 101： 128 cycles;	001b

			110: 1024 cycles; 111: 2047 cycles.	

PLL Configuration Register (R8_PLL_CONFIG)

Bit	Name	Access	Description	Reset value
[7:6]	Reserved	RO	Reserved	0
[5:0]	RB_PLL_CFG_DAT	RWA	PLL configuration parameters.	001010b

RTC Flag and Control Register (R8_RTC_FLAG_CTRL)

Bit	Name	Access	Description	Reset value
7	RB_RTC_TRIG_FLAG	RO	RTC trigger mode activation flag.	0
6	RB_RTC_TMR_FLAG	RO	RTC timing mode activation flag.	0
5	RB_RTC_TRIG_CLR	RW	This bit is always 1 when the trigger mode is disabled. When the trigger mode is enabled, write 1, clear the trigger mode activation flag RB_RTC_TRIG_FLAG and automatically cleared to 0.	1
4	RB_RTC_TMR_CLR	RW	When the timing mode is disabled, this bit is fixed as 1. When the timing mode is enabled, write 1, clear the timing mode activation flag RB_RTC_TMR_FLAG and automatically cleared to 0.	1
[3:0]	Reserved	RO	Reserved	0

RTC Mode Control Register (R8_RTC_MODE_CTRL)

Bit	Name	Access	Description	Reset value
7	RB_RTC_LOAD_HI	RWA	Write 1 to load the high word of RTC counter, and automatically cleared to 0 after loading. Load R32_RTC_TRIG (Actually only the low 14 bits) to R32_RTC_CNT_DAY.	0
6	RB_RTC_LOAD_LO	RWA	Write 1 to load the low word of RTC counter, and automatically cleared after loading. Load the high 16 bits of R32_RTC_TRIG to R16_RTC_CNT_2S; load the low 16 bits of R32_RTC_TRIG to R16_RTC_CNT_32K.	0
5	RB_RTC_TRIG_EN	RWA	RTC trigger mode enable: 1: Enable; 0: Disable.	0
4	RB_RTC_TMR_EN	RWA	RTC timing mode enable: 1: Enable; 0: Disable.	0
3	RB_RTC_IGNORE_B0	RWA	Ignore and compare the lowest bit of matching value in trigger mode: 1: Ignore the lowest bit;	0

			0: Compare the lowest bit.	
[2:0]	RB_RTC_TMR_MODE	RWA	RTC timing mode fixed cycle (timing) selection: 000: 0.125S; 001: 0.25S; 010: 0.5S; 011: 1S; 100: 2S; 101: 4S; 110: 8S; 111: 16S.	010b

RTC Trigger Value Register (R32_RTC_TRIG)

Bit	Name	Access	Description	Reset value
[31:0]	R32_RTC_TRIG	RWA	The preset matching value in RTC trigger mode, and the high 16 bits and low 16 bits are matched with R16_RTC_CNT_2S and R16_RTC_CNT_32K respectively. Cooperate with RB_RTC_LOAD_LO and RB_RTC_LOAD_HI to update the current value of RTC counter.	0

Note: The preset matching value is not directly written into the target time, and it involves simple calculations. Please refer to the following instructions.

RTC Based 32768Hz Count Value Register (R32_RTC_TRIG)

Bit	Name	Access	Description	Reset value
[15:0]	R16_RTC_CNT_32K	RO	RTC count value register based on 32768Hz.	XXXXh

RTC Count Value Register in the Unit of 2S (R16_RTC_CNT_2S)

Bit	Name	Access	Description	Reset value
[15:0]	R16_RTC_CNT_2S	RO	The current count value of the RTC in 2S units.	XXXXh

RTC Count Value Register in the Unit of Day (R32_RTC_CNT_DAY)

Bit	Name	Access	Description	Reset value
[31:16]	Reserved	RO	Reserved	0
[15:14]	Reserved	RO	Reserved	0
[13:0]	R32_RTC_CNT_DAY	RO	RTC current count value in the unit of day.	XXXXXXX XXXXXXXb

6.4 Functional Description and Configuration

6.4.1 RTC Counter Initialization

(1) Set the value of the R32_RTC_TRIG register and set RB_RTC_LOAD_HI, to load the value of the R32_RTC_TRIG register into the R32_RTC_CNT_DAY register;

(2) Set the value of the R32_RTC_TRIG register and set RB_RTC_LOAD_LO, to load the value of the high 16 bits and the low 16 bits of the R32_RTC_TRIG register into the R16_RTC_CNT_2S register and the R16_RTC_CNT_32K register respectively.

6.4.2 Switch RTC Clock Source to LSE Crystal

(1) Confirm that the GPIO pins where X32KI and X32KO are located are not set as outputs, with no pull-up and pull-down resistors, and only crystals are provided;

(2) Configure the R8_CK32K_CONFIG register, set RB_CLK_XT32K_PON to 1, to enable the external 32KHz crystal oscillator;

(3) It is recommended to set RB_XT32K_I_TUNE to the maximum first, and wait for the crystal oscillator to stabilize (about several hundreds of mS) and then change to the rated current;

(4) Configure the R8_CK32K_CONFIG register, set RB_CLK_OSC32K_XT to 1, and switch clock source to the crystal oscillator;

(5) Wait for at least half of the 32KHz clock cycle, usually 16uS, to actually finish the switch of clock source.

6.4.3 RTC Timing Function

(1) Configure R8_RTC_MODE_CTRL register, set RB_RTC_TMR_MODE to select the appropriate timing period, set RB_RTC_TMR_EN to 1, and turn on RTC timing function;

(2) After reaching the timing period, RTC timing activation flag RB_RTC_TMR_FLAG and interrupt will be generated; check R8_RTC_FLAG_CTRL register and set RB_RTC_TMR_CLR to clear the flag.

6.4.4 RTC Trigger Function

(1) Set the target matching value in R32_RTC_TRIG register, and see the calculation and operation steps: Calculate the target time value by taking the current time R32_RTC_CNT_32K (High 16 bits R16_RTC_CNT_2S and low 16 bits R16_RTC_CNT_32K) plus the interval time DelayTime (in the unit of S), T32 = R32_RTC_CNT_32K + DelayTime * 32768,
Write T32 into the R32_RTC_TRIG register to complete the matching value setting;

(2) Configure R8_RTC_MODE_CTRL, set RB_RTC_TRIG_EN to 1, and turn on RTC trigger function;

(3) When the current RTC count values R16_RTC_CNT_2S and R16_RTC_CNT_32K respectively match the preset high and low 16 bits of R32_RTC_TRIG, RTC trigger activation flag RB_RTC_TRIG_FLAG and interrupt are generated, and the flag can be cleared by setting RB_RTC_TRIG_CLR.

(4) If the RTC has been time-calibrated, then it can support the target absolute time trigger, which calculates the target time value T32 from the target year/month/day/hour/minute/second/milliseconds, and the other steps are the same as above. For details, please refer to the evaluation board example program.

Please refer to the evaluation board example program for details.

6.4.5 Calibrate Internal 32K Clock LSI with HSE

Refer to evaluation board example program.

Chapter 7 General-purpose I/O and Alternate Functions

7.1 Introduction to GPIO

The chip provides 2 sets of GPIO ports PA and PB, with a total of 40 general-purpose input and output pins, 24 of which have interrupt and wake-up functions, and some of which have alternate and mapping functions.

Each GPIO port has a 32-bit direction configuration register R32_Px_DIR, a 32-bit pin input register R32_Px_PIN, a 32-bit data output register R32_Px_OUT, a 32-bit data reset register R32_Px_CLR, a 32-bit pull-up resistor configuration register R32_Px_PU, a 32 pull-down resistor/drive capability configuration register R32_Px_PD_DRV.

The PA[4]~PA[15] bits in the PA port are valid, corresponding to the 16 GPIO pins on the chip.

The PB[0]~PB[23] bits in the PA port are valid, corresponding to the 24 GPIO pins on the chip.

Each I/O port bit can be freely programmed, but the I/O port register must be accessed by 8-bit, 16-bit or 32-bit words. If the alternate function of pin is not enabled, it will be used as a general-purpose I/O port by default.

The following figure is the block diagram of GPIO internal architecture:

Figure 7-1 I/O internal architecture block diagram

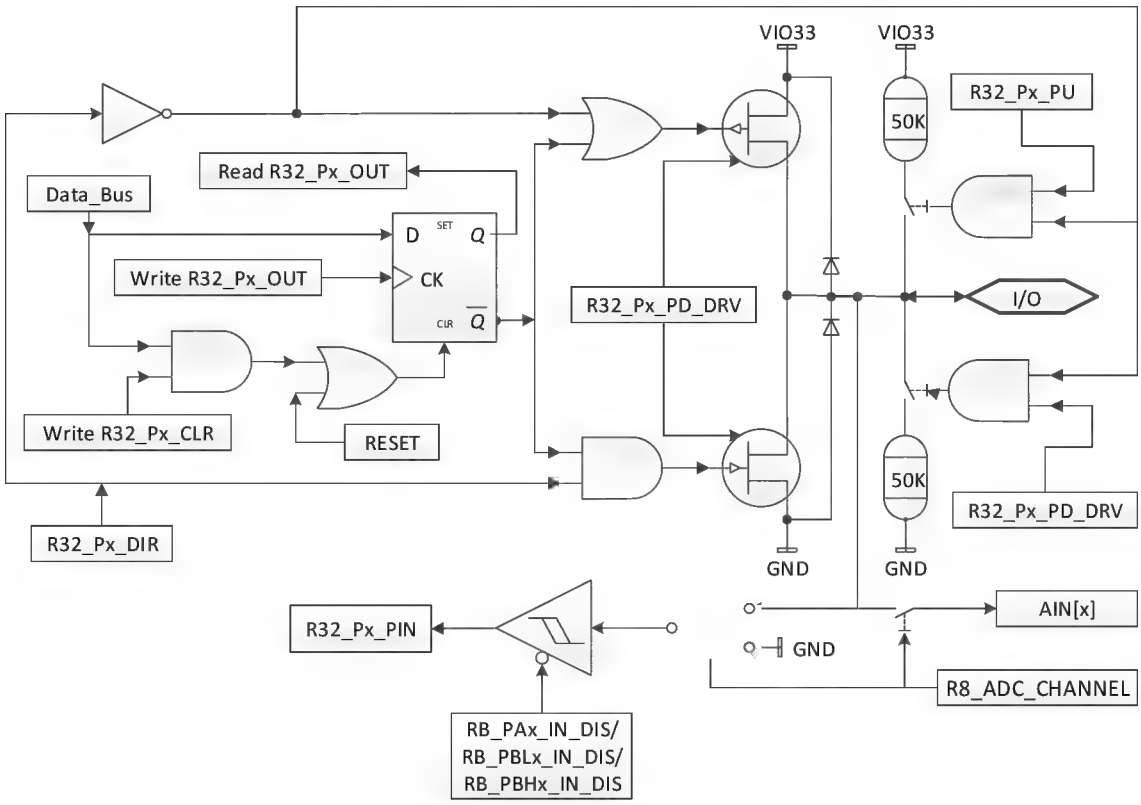

7.2 External Interrupt/Wakeup

Parts of I/O pins of the chip have interrupt function and can realize sleep and wakeup.

In order to use external interrupts, the port bits must be configured in input mode. And provide 4 kinds of trigger modes: high level, low level, rising edge, falling edge.

The wake-up function needs to enable the interrupt R16_Px_INT_EN of the port bit, and turn on the GPIO wake-up control bit RB_SLP_GPIO_WAKE in the R8_SLP_WAKE_CTRL register.

When multiple I/Os are configured for edge wakeup, one of the I/Os generates a qualified wake-up signal, and the other configured I/Os must comply with the following conditions: if configured for rising edge wakeup, it needs to be held low; if configured for falling edge wakeup, it needs to be held high. Only at this time can it wake up normally.

7.3 GPIO Alternate and Remapping

7.3.1 Alternate Functions

Some I/O pins have alternate functions. After power on, all I/O pins are as GPIO by default. After enabling various functional modules, the corresponding original GPIO pins are configured as corresponding functional pins of each functional module.

If a pin has multiple alternate functions, and multiple functions are enabled, please refer to the function order in the 'Alternate Function' list in the pin description in section 1.2 for the priority order of alternate functions.

For example: If the PB23 pin is alternate as RST#/TMR0_/TXD2/PWM11, RST# reset input function has a high priority, and PWM11 output function has the lowest priority. In this way, the alternate functions with the relatively higher priority of the pin whose functions with the lowest priority need not to be used can be enabled among multiple alternate functions.

The following tables list some GPIO configurations of some functional pins which are used for peripheral modules.

Table 7-1 Timer x

TMR0/1/2/3 pin	Functional configuration	GPIO configuration
TMRx	Input capture channel x	Input (Floating input/pull-up input/pull-down input)
	Output PWM channel x	Push-pull output

Table 7-2 UARTx

UART0/1/2/3 pin	Functional configuration	GPIO configuration
TXDx	UART transmit x	Push-pull output
RXDx	UART receive x	Pull-up input (recommended) or floating input
RTS/DTR	MODEM signal output or RS485 control	Push-pull output
CTS/DSR/RI/DCD	MODEM signal input	Pull-up input (recommended) or floating input

Table 7-3 SPI

SPI pin	Functional configuration	GPIO configuration
SCKx	Clock output in master mode	Push-pull output

	Clock input in slave mode	Input (floating input/pull-up input/pull-down input)
MOSIx	Full-duplex mode-master mode	Push-pull output
	Full-duplex mode-slave mode	Input (floating input/pull-up input/pull-down input)
	Half-duplex mode-master mode	Not used, can be used as general purpose I/O
	Half-duplex mode-slave mode	Not used, can be used as general purpose I/O
MISOx	Full-duplex mode-master mode	Input (floating input/pull-up input/pull-down input)
	Full duplex mode-slave mode	Input (Pull-up is recommended, automatically switched to push-pull output after chip select) or push-pull output (it is forbidden to be used for bus connection)
	Half duplex mode-master mode	Input or push-pull output, manual switching
	Half duplex mode-slave mode	Input (Pull-up is recommended, automatically switched to push-pull output after chip select)
SCS	Chip select output in master mode	Push-pull output (can be replaced with other pins)
	Chip select input in slave mode	Pull-up input (recommended) or floating input

Table 7-4 I2C

I2C pin	Functional configuration	GPIO configuration
SCL	Serial clock output – master mode	Push-pull output (Multi-master is not supported in this mode)
	Serial clock output/input – multi-master mode	Input (Pull-up is recommended, automatically open-drain output when needed)
	Serial clock input – slave mode	Pull-up input (recommended) or floating input
SDA	Serial data input/output	Input (Pull-up is recommended, automatically open-drain output when needed)

Table 7-5 ADC

ADC sample channel pin	Functional configuration	GPIO configuration
Ax	ADC input channel	Floating input

Table 7-6 USB

USB signal pin	Functional configuration	GPIO configuration
UD-	Connected to internal full-speed USB transceiver	Floating input
UD+	Connected to internal full-speed USB transceiver	Floating input
U2D-	Connected to internal high-speed USB transceiver	Floating input
U2D+	Connected to internal full-speed USB transceiver	Floating input

Table 7-7 NFC

USB signal pin	Functional configuration	GPIO configuration
NFCI，NFCM	NFC analog input	Analog input
NFC+，NFC-	NFC analog output	Analog input

7.3.2 Remapping of Function Pins

In order to enable the peripheral functions and optimize the utilization rate at the same time, some function pins can be remapped to other pins by setting the function pin remapping register (R16_PIN_ALTERNATE).

Table 7-8 Alternate function remapping pins

Peripheral function pins	Default GPIO pins	Remapped GPIO pins
SCS/SCK0/MOSI/MISO	PA[12]/PA[13]/PA[14]/PA[15]	PB[12]/PB[13]/PB[14]/PB[15]
RXD3/TXD3	PA[4]/PA[5]	PB[20]/PB[21]
RXD2/TXD2	PA[6]/PA[7]	PB[22]/PB[23]
RXD1/TXD1	PA[8]/PA[9]	PB[12]/PB[13]
RXD0/TXD0/DSR/DTR	PB[4]/PB[7]/PB[1]/PB[5]	PA[15]/PA[14]/PB[14]/PB[15]
TMR3/PWM3/CAP3	PB[22]	PA[2]
TMR2/PWM2/CAP2	PA[11]	PB[11]
TMR1/PWM1/CAP1	PA[10]	PB[10]
TMR0/PWM0/CAP0	PA[9]	PB[23]
PWM4/PWM5	PA[12]/PA[13]	PA[6]/PA[7]
PWM7/PWM8/PWM9	PB[4]/PB[6]/PB[7]	PB[1]/PB[2]/PB[3]
SCL/SDA	PB[13]/PB[12]	PB[21]/PB[20]

7.4 Register Description

Table 7-9 GPIO registers

Name	Access address	Description	Reset value
R16_PIN_ALTERNATE	0x40001018	Function pin remapping register	0x0000
R16_PIN_CONFIG	0x4000101A	Function pin configuration register	0x0000
R32_PIN_IN_DIS	0x4000101C	Function pin digital input disable register	0x0000
R16_PA_INT_EN	0x40001090	PA port interrupt enable register	0x0000
R16_PB_INT_EN	0x40001092	PB port interrupt enable register	0x0000
R16_PA_INT_MODE	0x40001094	PA port interrupt mode configuration register	0x0000
R16_PB_INT_MODE	0x40001096	PB port interrupt mode configuration register	0x0000
R16_PA_INT_IF	0x4000109C	PA port interrupt flag register	0x0000
R16_PB_INT_IF	0x4000109E	PB port interrupt flag register	0x0000
R32_PA_DIR	0x400010A0	PA port direction configuration register	0x00000000
R32_PA_PIN	0x400010A4	PA port pin input register	0x0000XXXX
R32_PA_OUT	0x400010A8	PA port data output register	0x00000000
R32_PA_CLR	0x400010AC	PA port data reset register	0x00000000
R32_PA_PU	0x400010B0	PA port pull-up resistor configuration register	0x00000000
R32_PA_PD_DRV	0x400010B4	PA port pull-down/drive configuration register	0x00000000

R32_PA_SET	0x400010B8	PA port output set register	0x00000000
R32_PB_DIR	0x400010C0	PB port direction configuration register	0x00000000
R32_PB_PIN	0x400010C4	PB port pin input register	0x00XXXXXX
R32_PB_OUT	0x400010C8	PB port data output register	0x00000000
R32_PB_CLR	0x400010CC	PB port data reset register	0x00000000
R32_PB_PU	0x400010D0	PB port pull-up resistor configuration register	0x00000000
R32_PB_PD_DRV	0x400010D4	PB port pull-down/drive configuration register	0x00000000
R32_PB_SET	0x400010D8	PB port output set register	0x00000000

Function Pin Remapping Register (R16_PIN_ALTERNATE)

Bit	Name	Access	Description	Reset value
15	RB_RF_ANT_SW_EN	RW	RF antenna switch control output enable: 1: Switch control output to PB[16]~PB[21]; 0: Disable output.	0
14	RB_PIN_U0_INV	RW	UART0 input and output invert enable: 1: RXD0/RXD0_ inverted input, TXD0/TXD0_ inverted output; 0: Normal in-phase input and output.	0
13	RB_PIN_INTX	RW	INT24/INT25 function pin mapping selection bits: 1: INT24_/25_ maps to PB[22]/PB[23]; 0: INT24/25 mapped to PB[8]/PB[9]. Note: INT24/INT25 are the interrupt inputs corresponding to [9:8] in R16_PB_INT_EN, R16_PB_INT_MODE, and R16_PB_INT_IF.	0
12	RB_PIN_MODEM	RW	UART0 MODEM function pin mapping selection bits: 1: DSR_/DTR_ mapped to PB[14]/PB[15]; 0: DSR/DTR mapped to PB[1]/PB[5].	0
11	RB_PIN_I2C	RW	I2C function pin mapping selection bits: 1: SCL_/SDA_ mapped to PB[21]/PB[20]; 0: SCL/SDA mapped to PB[13]/PB[12].	0
10	RB_PIN_PWMX	RW	PWMx function pin mapping selection bits: 1: PWM4/5/7/8/9 mapped to PA[6]/PA[7]/PB[1]/PB[2]/PB[3]; 0: PWM4/5/7/8/9 maps to PA[12]/PA[13]/PB[4]/PB[6]/PB[7].	0
9	Reserved	RO	Reserved	0
8	RB_PIN_SPI0	RW	SPI0 function pin mapping selection bits: 1: SCK0_/SCS_/MOSI_/MISO_ maps to PB[12]/PB[13]/PB[14]/PB[15];	0

			0: SCK0/SCS/MOSI/MISO maps to PA[12]/PA[13]/PA[14]/PA[15].	
7	RB_PIN_UART3	RW	UART3 function pin mapping selection bits: 1: RXD3_/TXD3_ maps to PB[20]/PB[21]; 0: RXD3/TXD3 maps to PA[4]/PA[5].	0
6	RB_PIN_UART2	RW	UART2 function pin mapping selection bits: 1: RXD2_/TXD2_ maps to PB[22]/PB[23]; 0: RXD2/TXD2 maps to PA[6]/PA[7].	0
5	RB_PIN_UART1	RW	UART1 function pin mapping selection bits: 1: RXD1_/TXD1_ maps to PB[12]/PB[13]; 0: RXD1/TXD1 maps to PA[8]/PA[9].	0
4	RB_PIN_UART0	RW	UART0 function pin mapping selection bits: 1: RXD0_/TXD0_ maps to PA[15]/PA[14]; 0: RXD0/TXD0 maps to PB[4]/PB[7].	0
3	RB_PIN_TMR3	RW	TMR3 function pin mapping selection bits: 1: TMR3_/PWM3_/CAP3_ maps to PA[2]; 0: TMR3/PWM3/CAP3 maps to PB[22].	0
2	RB_PIN_TMR2	RW	TMR2 function pin mapping selection bits: 1: TMR2_/PWM2_/CAP2_ maps to PB[11]; 0: TMR2/PWM2/CAP2 maps to PA[11].	0
1	RB_PIN_TMR1	RW	TMR1 function pin mapping selection bits: 1: TMR1_/PWM1_/CAP1_ maps to PB[10]; 0: TMR1/PWM1/CAP1 maps to PA[10].	0
0	RB_PIN_TMR0	RW	TMR0 function pin mapping selection bits: 1: TMR0_/PWM0_/CAP0_ maps to PB[23]; 0: TMR0/PWM0/CAP0 maps to PA[9].	0

Function Pin Configuration Register (R16_PIN_CONFIG)

Bit	Name	Access	Description	Reset value
[15:8]	RB_PBHx_IN_DIS	RW	(x = [23:16]) PB16~PB23 channel pin digital input disabled. 1: Turn off digital inputs to reduce I/O leakage, PB16~PB23 are LCD segment drivers; 0: Turn on the digital input and turn off the LCD segment driver. *Note: 1. Bits 8~15 correspond to*	0

			PB16~PB23 one by one. *2. Please refer to the corresponding bit of register R32_PIN_IN_DIS for PB0~PB15 channel pin digital input disable.*	
7	RB_PIN_USB_EN	RW	Full-speed USB pin enable: 1: PB10~11 are for full-speed USB communication pins; 0: PB10~11 are not used for full-speed USB communication.	0
6	RB_UDP_PU_EN	RW	Full-speed USB UD+ pin internal pull-up resistor enable: 1: Force enable pull-up (RB_UC_DEV_PU_EN does not work in sleep or power-down mode, so this is substituted); 0: Pull-up or not controlled by RB_UC_DEV_PU_EN.	0
5	RB_PIN_USB2_EN	RW	High-speed USB pin enable: 1: PB12~13 are for Hi-Speed USB communication pins; 0: PB12~13 are not used for Hi-Speed USB communication.	0
4	RB_PB16_8_SEL	RW	PB8 and PB16 interrupt pin selection: 1: PB16; 0: PB8.	0
[3:0]	Reserved	RO	Reserved	0

Note: If the pin is used for analog functions, it is recommended to turn off the digital input function of the pin, i.e., set the digital input disabled, which can reduce power consumption and help reduce interference.

Function Pin Digital Input Disable Register (R32_PIN_IN_DIS)

Bit	Name	Access	Description	Reset value
[31:16]	RB_PBLx_IN_DIS	RW	(x = [15:0]) PB0~PB15 channel pin digital input disabled. 1: Turn off digital inputs to reduce I/O leakage, PB0~PB15 are LCD segment drivers; 0: turn on the digital input and turn off the LCD segment driver. *Note: 1. Bit 16~31 corresponds to PB0~PB15 one by one.* *2. For PB16~PB23 channel pin digital input disable, please refer to the corresponding bit of register*	0

			R16_PIN_CONFIG.	
[15:0]	RB_PAx_IN_DIS	RW	(x = [15:0]) PA0~PA15 channel pin digital inputs disabled. 1: Turn off digital inputs to reduce I/O leakage, where PA0~PA3, PA7~PA9 and PA13 are LCD segment drivers; 0: Turn on the digital input and turn off the LCD segment driver. *Note: Bits 0~15 correspond one-to-one with PA0~PA15.*	0

PA Port Interrupt Enable Register (R16_PA_INT_EN)

Bit	Name	Access	Description	Reset value
[15:0]	R16_PA_INT_EN	RW	PA pin interrupt enable bit: 1: Enable the corresponding interrupt; 0: Disable the corresponding interrupt.	0

PB Port Interrupt Enable Register (R16_PB_INT_EN)

Bit	Name	Access	Description	Reset value
[15:0]	R16_PB_INT_EN	RW	PB pin interrupt enable bit: 1: Enable the corresponding interrupt; 0: Disable the corresponding interrupt.	0

Note: R16_PB_INT_EN[9:8] is selected by RB_PIN_INTX to correspond to PB[23:22] or PB[9:8].

PA Port Interrupt Mode Configuration Register (R16_PA_INT_MODE)

Bit	Name	Access	Description	Reset value
[15:0]	R16_PA_INT_MODE	RW	PA pin interrupt mode select bit: 1: Edge trigger; 0: Level trigger.	0

PB Port Interrupt Mode Configuration Register (R16_PB_INT_MODE)

Bit	Name	Access	Description	Reset value
[15:0]	R16_PB_INT_MODE	RW	PB pin interrupt mode select bit: 1: Edge trigger; 0: Level trigger.	0

Note: R16_PB_INT_MODE[9:8] is selected by RB_PIN_INTX to correspond to PB[23:22] or PB[9:8].

PA Port Interrupt Flag Register (R16_PA_INT_IF)

Bit	Name	Access	Description	Reset value
[15:0]	R16_PA_INT_IF	RW1Z	PA pin interrupt flag bit, write 1 to clear: 1: Interrupt; 0: No interrupt.	0

PB Port Interrupt Flag Register (R16_PB_INT_IF)

Bit	Name	Access	Description	Reset value
[15:0]	R16_PB_INT_IF	RW1Z	PB pin interrupt flag bit, write 1 to clear:	0

			1: Interrupt; 0: No interrupt.	

Note: R16_PB_INT_IF[9:8] is selected by RB_PIN_INTX to correspond to PB[23:22] or PB[9:8].

PA Port Direction Configuration Register (R32_PA_DIR)

Bit	Name	Access	Description	Reset value
[31:16]	Reserved	RO	Reserved	0
[15:8]	R8_PA_DIR_1	RW	Current input/output direction configure of PA pin: 1: The pin is in output mode; 0: The pin is in input mode.	0
[7:0]	R8_PA_DIR_0	RW		0

PA Port Pin Input Register (R32_PA_PIN)

Bit	Name	Access	Description	Reset value
[31:16]	Reserved	RO	Reserved	0
[15:8]	R8_PA_PIN_1	RO	Current level status of PA pin (valid only when R32_PA_DIR corresponding bit is 0): 1: Pin input is at high level; 0: Pin input is at low level.	XXh
[7:0]	R8_PA_PIN_0	RO		XXh

PA Port Data Output Register (R32_PA_OUT)

Bit	Name	Access	Description	Reset value
[31:16]	Reserved	RO	Reserved	0
[15:8]	R8_PA_OUT_1	RW	When the corresponding bit of direction register R32_PA_DIR is 1: Control PA pin output level status: 1: Output high level; 0: Output low level. When the corresponding bit of direction register R32_PA_DIR is 0: Control PA pin interrupt polarity select: 1: High level/rising edge; 0: Low level/falling edge.	0
[7:0]	R8_PA_OUT_0	RW		0

PA Port Data Reset Register (R32_PA_CLR)

Bit	Name	Access	Description	Reset value
[31:16]	Reserved	RO	Reserved	0
[15:8]	R8_PA_CLR_1	WZ	PA data register reset control: 1: The corresponding bit data of R32_PA_OUT is cleared to 0; 0: No effect.	0
[7:0]	R8_PA_CLR_0	WZ		0

PA Port Pull-up Resistor Configuration Register (R32_PA_PU)

Bit	Name	Access	Description	Reset value
[31:16]	Reserved	RO	Reserved	0
[15:8]	R8_PA_PU_1	RW	PA pin pull-up resistor enable control: 1: Enable the pull-up resistor; 0: Disable the pull-up resistor.	0
[7:0]	R8_PA_PU_0	RW		0

PA Port Pull-down/Drive Configuration Register (R32_PA_PD_DRV)

Bit	Name	Access	Description	Reset value
[31:16]	Reserved	RO	Reserved	0
[15:8]	R8_PA_PD_DRV_1	RW	When the corresponding bit of direction register R32_PA_DIR is 0: PA pin pull-down resistor enable control: 1: Enable the pull-down resistor; 0: Disable the pull-down resistor. When the corresponding bit of direction register R32_PA_DIR is 1: PA pin current drive capability select: 1: 20mA level; 0: 5mA level.	0
[7:0]	R8_PA_PD_DRV_0	RW		0

PA Port Output Set Register (R32_PA_SET)

Bit	Name	Access	Description	Reset value
[31:16]	Reserved	RO	Reserved	0
[15:8]	R8_PA_SET_1	WZ	When the corresponding bit of the setting register R32_PA_SET is 0, the output of the PA pin remains; When it is 1, the PA pin outputs a high level.	0
[7:0]	R8_PA_SET_0	WZ		0

PB Port Direction Configuration Register (R32_PB_DIR)

Bit	Name	Access	Description	Reset value
[31:24]	Reserved	RO	Reserved	0
[23:16]	R8_PB_DIR_2	RW	Current input/output direction configure of PB pin: 1: The pin is in output mode; 0: The pin is in input mode.	0
[15:8]	R8_PB_DIR_1	RW		0
[7:0]	R8_PB_DIR_0	RW		0

PB Port Pin Input Register (R32_PB_PIN)

Bit	Name	Access	Description	Reset value
[31:24]	Reserved	RO	Reserved	0
[23:16]	R8_PB_PIN_2	RO	Current level state of PB pin (only when the corresponding bit of R32_PB_DIR is 0, the bit value is valid): 1: Pin input is at high level;	XXh
[15:8]	R8_PB_PIN_1	RO		XXh
[7:0]	R8_PB_PIN_0	RO		XXh

			0: Pin input is at low level.	

PB Port Data Output Register (R32_PB_OUT)

Bit	Name	Access	Description	Reset value
[31:24]	Reserved	RO	Reserved	0
[23:16]	R8_PB_OUT_2	RW	When the corresponding bit of direction register R32_PB_DIR is 1: Control PB pin output level status: 1: Output high level; 0: Output low level.	0
[15:8]	R8_PB_OUT_1	RW	When the corresponding bit of direction register R32_PB_DIR is 1: Control PB pin output level status: 1: Output high level; 0: Output low level.	0
[7:0]	R8_PB_OUT_0	RW	When the corresponding bit of direction register R32_PB_DIR is 0: Control PB pin interrupt polarity select: 1: High level/rising edge; 0: Low level/falling edge.	0

PB Port Data Reset Register (R32_PB_CLR)

Bit	Name	Access	Description	Reset value
[31:24]	Reserved	RO	Reserved	0
[23:16]	R8_PB_CLR_2	WZ	PB data register reset control: 1: The corresponding bit data of R32_PB_OUT is cleared to 0; 0: No effect.	0
[15:8]	R8_PB_CLR_1	WZ		0
[7:0]	R8_PB_CLR_0	WZ		0

PB Port Pull-up Resistor Configuration Register (R32_PB_PU)

Bit	Name	Access	Description	Reset value
[31:24]	Reserved	RO	Reserved	0
[23:16]	R8_PB_PU_2	RW	PB pin pull-up resistor enable control: 1: Enable the pull-up resistor; 0: Disable the pull-up resistor.	0
[15:8]	R8_PB_PU_1	RW		0
[7:0]	R8_PB_PU_0	RW		0

PB Port Pull-down/Drive Configuration Register (R32_PB_PD_DRV)

Bit	Name	Access	Description	Reset value
[31:24]	Reserved	RO	Reserved	0
[23:16]	R8_PB_PD_DRV_2	RW	When the corresponding bit of direction register R32_PB_DIR is 0: PB pin pull-down resistor enable control: 1: Enable the pull-down resistor; 0: Disable the pull-down resistor. When the corresponding bit of direction	0
[15:8]	R8_PB_PD_DRV_1	RW		0
[7:0]	R8_PB_PD_DRV_0	RW		0

			register R32_PB_DIR is 1: PB pin current drive capability select: 1: 20mA level; 0: 5mA level.	

PB Port Output Set Register (R32_PB_SET)

Bit	Name	Access	Description	Reset value
[31:24]	Reserved	RO	Reserved	0
[23:16]	R8_PB_SET_2	WZ	When the corresponding bit of the setting register R32_PB_SET is 0, the output of the PB pin remains; When it is 1, the PB pin outputs a high level.	0
[15:8]	R8_PB_SET_1	WZ		0
[7:0]	R8_PB_SET_0	WZ		0

7.5 Mode Configuration of GPIO Pins

Each GPIO can be configured to 5 modes, as shown in the table below:

Table 7-10 Port configuration

Mode	R32_Px_DIR	R32_Px_PU	RB_PAx_IN_DIS/ RB_PBLx_IN_DIS/ RB_PBHx_IN_DIS	R32_Px_PD_DRV
Floating input/high impedance input/analog input	0	0	0	0
Analog inputs only (reduces I/O leakage)	0	0	1	0
Input with pull-up resistor	0	1	0	0
Input with pull-down resistor	0	0	0	1
Push-pull output, 5mA level drive capability:	1	X	X	0
Push-pull output, 20mA level drive capability:	1	X	X	1

Chapter 8 General-purpose Timer (TMRx)

8.1 Introduction to TMRx

The chip is equipped with four 26-bit timers, TMR0, TMR1, TMR2 and TMR3, and the longest timing interval is 2^26 clock cycles. It is applicable to various occasions, including measuring the length of input signal pulse (input capture) or generating output waveform (PWM). In addition, support DMA function. Each timer is completely independent and can be operated simultaneously.

8.1.1 Main Features

- 4 × 26-bit timers, and the longest timing interval is 2^26 clock cycles.
- Timer interrupt is supported, and among them TMR1 and TMR2 support DMA and interrupt.
- Support capture function to measure input pulse length or cycle.
- The capture function can be set to be capture of level change and hold time of high or low level.
- 26-bit PWM function is supported, which can dynamically adjust the PWM duty cycle setting.

8.2 Introduction to TMRx

Table 8-1 TMR0 registers

Name	Access address	Description	Reset value
R8_TMR0_CTRL_MOD	0x40002000	Mode set register	0x02
R8_TMR0_CTRL_DMA	0x40002001	DMA control register	0x00
R8_TMR0_INTER_EN	0x40002002	Interrupt enable register	0x00
R8_TMR0_INT_FLAG	0x40002006	Interrupt flag register	0x00
R8_TMR0_FIFO_COUNT	0x40002007	FIFO count register	0x0X
R32_TMR0_COUNT	0x40002008	Current count value register	0x0XXXXXXX
R32_TMR0_CNT_END	0x4000200C	Final count value set register	0x0XXXXXXX
R32_TMR0_FIFO	0x40002010	FIFO register	0x0XXXXXXX
R32_TMR0_DMA_NOW	0x40002014	DMA count buffer address	0x000XXXXX
R32_TMR0_DMA_BEG	0x40002018	DMA begin buffer address	0x000XXXXX
R32_TMR0_DMA_END	0x4000201C	DMA end buffer address	0x000XXXXX

Table 8-2 TMR1 registers

Name	Access address	Description	Reset value
R8_TMR1_CTRL_MOD	0x40002400	Mode set register	0x02
R8_TMR1_CTRL_DMA	0x40002401	DMA control register	0x00
R8_TMR1_INTER_EN	0x40002402	Interrupt enable register	0x00
R8_TMR1_INT_FLAG	0x40002406	Interrupt flag register	0x00
R8_TMR1_FIFO_COUNT	0x40002407	FIFO count register	0x0X
R32_TMR1_COUNT	0x40002408	Current count value register	0x0XXXXXXX
R32_TMR1_CNT_END	0x4000240C	Final count value set register	0x0XXXXXXX
R32_TMR1_FIFO	0x40002410	FIFO register	0x0XXXXXXX
R32_TMR1_DMA_NOW	0x40002414	DMA count buffer address	0x000XXXXX

R32_TMR1_DMA_BEG	0x40002418	DMA begin buffer address	0x000XXXXX
R32_TMR1_DMA_END	0x4000241C	DMA end buffer address	0x000XXXXX

Table 8-3 TMR2 registers

Name	Access address	Description	Reset value
R8_TMR2_CTRL_MOD	0x40002800	Mode set register	0x02
R8_TMR2_CTRL_DMA	0x40002801	DMA control register	0x00
R8_TMR2_INTER_EN	0x40002802	Interrupt enable register	0x00
R8_TMR2_INT_FLAG	0x40002806	Interrupt flag register	0x00
R8_TMR2_FIFO_COUNT	0x40002807	FIFO count register	0x0X
R32_TMR2_COUNT	0x40002808	Current count value register	0x0XXXXXXX
R32_TMR2_CNT_END	0x4000280C	Final count value set register	0x0XXXXXXX
R32_TMR2_FIFO	0x40002810	FIFO register	0x0XXXXXXX
R32_TMR2_DMA_NOW	0x40002814	DMA count buffer address	0x000XXXXX
R32_TMR2_DMA_BEG	0x40002818	DMA begin buffer address	0x000XXXXX
R32_TMR2_DMA_END	0x4000281C	DMA end buffer address	0x000XXXXX

Table 8-4 TMR3 registers

Name	Access address	Description	Reset value
R8_TMR3_CTRL_MOD	0x40002C00	Mode set register	0x02
R8_TMR3_CTRL_DMA	0x40002C01	DMA control register	0x00
R8_TMR3_INTER_EN	0x40002C02	Interrupt enable register	0x00
R8_TMR3_INT_FLAG	0x40002C06	Interrupt flag register	0x00
R8_TMR3_FIFO_COUNT	0x40002C07	FIFO count register	0x0X
R32_TMR3_COUNT	0x40002C08	Current count value register	0x0XXXXXXX
R32_TMR3_CNT_END	0x40002C0C	Final count value set register	0x0XXXXXXX
R32_TMR3_FIFO	0x40002C10	FIFO register	0x0XXXXXXX
R32_TMR3_DMA_NOW	0x40002C14	DMA count buffer address	0x000XXXXX
R32_TMR3_DMA_BEG	0x40002C18	DMA begin buffer address	0x000XXXXX
R32_TMR3_DMA_END	0x40002C1C	DMA end buffer address	0x000XXXXX

Mode Set Register (R8_TMRx_CTRL_MOD) (x=0/1/2/3)

Bit	Name	Access	Description	Reset value
[7:6]	RB_TMR_CAP_EDGE	RW	Capture trigger mode selection in capture mode: 00: Not triggered; 01: Capture the time between any edge changes; 10: Capture the time between falling edges; 11: Capture the time between rising edges. In the count mode, select the edge of count: 00: Not sample count;	0

			01: Count when sampling to any edge; 10: Count when sampling to falling edge; 11: Count when sampling to rising edge.	
[7:6]	RB_TMR_PWM_REPEAT	RW	Data repetition selection in PWM mode: 00: Repeat once; 01: Repeat 4 times; 10: Repeat 8 times; 11: Repeat 16 times.	0
5	Reserved	RO	Reserved	0
4	RB_TMR_CAP_COUNT	RW	Sub-mode of RB_TMR_MODE_IN=1 input mode: 1: Count mode; 0: Capture mode.	0
4	RB_TMR_OUT_POLAR	RW	In PWM mode, output polarity set: 1: Default at high level, active low; 0: Default at low level, active high;	0
3	RB_TMR_OUT_EN	RW	Timer output enable: 1: Output enabled; 0: Output disabled.	0
2	RB_TMR_COUNT_EN	RW	Timer count enable: 1: Enable counting; 0: Disable counting.	0
1	RB_TMR_ALL_CLEAR	RW	Clear the FIFO/counter/interrupt flag of timer: 1: Force to empty and clear; 0: Not clear.	1
0	RB_TMR_MODE_IN	RW	Timer mode set: 1: Input mode (capture mode or count mode); 0: Timing mode or PWM mode.	0

Interrupt Enable Register (R8_TMRx_INTER_EN) (x=0/1/2/3)

Bit	Name	Access	Description	Reset value
[7:5]	Reserved	RO	Reserved	0
4	RB_TMR_IE_FIFO_OV	RW	FIFO overflow (FIFO is full in capture mode or FIFO is empty in PWM mode) interrupt enable: 1: Enable interrupt; 0: Disable interrupt.	0
3	RB_TMR_IE_DMA_END	RW	DMA end interrupt enable: 1: Enable interrupt; 0: Disable interrupt.	0
2	RB_TMR_IE_FIFO_HF	RW	FIFO used more than half (FIFO>=4 in capture mode or FIFO<4 in PWM mode) interrupt enable: 1: Enable interrupt; 0: Disable interrupt.	0
1	RB_TMR_IE_DATA_ACT	RW	Data activation (In capture mode, it means that every time new data is captured. In PWM mode, it means that value triggers the effective level to end) interrupt enable: 1: Enable interrupt; 0: Disable interrupt.	0
0	RB_TMR_IE_CYC_END	RW	Cycle end (It refers to timeout in capture	0

			mode, and it refers to the end of cycle in PWM mode and timing mode) interrupt enable: 1: Enable interrupt; 0: Disable interrupt.	

Interrupt Flag Register (R8_TMRx_INT_FLAG) (x=0/1/2/3)

Bit	Name	Access	Description	Reset value
[7:5]	Reserved	RO	Reserved	0
4	RB_TMR_IF_FIFO_OV	RW1Z	FIFO overflow (FIFO is full in capture mode or FIFO is empty in PWM mode) flag. Write 1 to reset: 1: Has overflowed; 0: Not overflowed.	0
3	RB_TMR_IF_DMA_END	RW1Z	DMA end. Write 1 to reset: 1: Has completed; 0: Not completed.	0
2	RB_TMR_IF_FIFO_HF	RW1Z	FIFO used more than half (FIFO>=4 in capture mode or FIFO<4 in PWM mode) flag. Write 1 to reset: 1: FIFO has been used more than half; 0: FIFO has not been used more than half.	0
1	RB_TMR_IF_DATA_ACT	RW1Z	Data activation (It means that every time new data is captured in capture mode, and it means that value triggers the effective level to end in PWM mode) flag. Write 1 to reset: 1: Data generated/used; 0: Not generated/not used.	0
0	RB_TMR_IF_CYC_END	RW1Z	Cycle end (It refers to timeout in capture mode, and it refer to the end of cycle in PWM mode and timing mode) flag. Write 1 to reset: 1: Timeout/end of cycle; 0: No timeout/ not end.	0

FIFO Count Register (R8_TMRx_FIFO_COUNT) (x=0/1/2/3)

Bit	Name	Access	Description	Reset value
[7:4]	Reserved	RO	Reserved	0
[3:0]	R8_TMRx_FIFO_COUNT	RO	Data count in FIFO, the maximum value is 8.	0Xh

Current Count Value Register (R32_TMRx_COUNT) (x=0/1/2/3)

Bit	Name	Access	Description	Reset value
[31:26]	Reserved	RO	Reserved	0Xh

[25:0]	R32_TMRx_COUNT	RO	Current count value of counter.	XXXXXXXh

Final Count Value Set Register (R32_TMRx_CNT_END) (x=0/1/2/3)

Bit	Name	Access	Description	Reset value
[31:0]	R32_TMRx_CNT_END	RW	In timer mode, the number of clocks in a timing cycle; In PWM mode, the total number of clocks in a PWM cycle; Capture the number of timeout clocks in capture mode. Only the lower 26 bits are valid, and the maximum value is 67108863. In counting mode, final count value -2 (overflow). *Note: With write operation on this register, the value of R32_TMRx_COUNT will be automatically cleared to 0.*	0XXXXXXXh

FIFO Register (R32_TMRx_FIFO) (x=0/1/2/3)

Bit	Name	Access	Description	Reset value
[31:0]	R32_TMRx_FIFO	RO/WO	FIFO data register, only the lower 26 bits are valid.	0XXXXXXXh

DMA Control Register (R8_TMRx_CTRL_DMA) (x=0/1/2/3)

Bit	Name	Access	Description	Reset value
[7:3]	Reserved	RO	Reserved	0
2	RB_TMR_DMA_LOOP	RW	DMA address loop enable bit: 1: Enable address loop; 0: Disable address loop. If the DMA address loop is enabled, when the DMA address is added to the set end address, it will automatically loop to the start address set.	0
1	Reserved	RO	Reserved	0
0	RB_TMR_DMA_ENABLE	RW	DMA function enable bit: 1: DMA enabled. 0: DMA disabled.	0

DMA Current Buffer Address (R16_TMRx_DMA_NOW) (x=0/1/2/3)

Bit	Name	Access	Description	Reset value
15	Reserved	RO	Reserved	0
[14:2]	R16_TMRx_DMA_NOW	RO	Current address of DMA data buffer. It can be used to calculate the number of	XXXXh

			conversions, and the calculation method is: COUNT= (TMR_DMA_NOW-TMR_D MA_BEG)/4.	
[1:0]	Reserved	RO	Reserved	0

DMA Begin Buffer Address (R16_TMRx_DMA_BEG) (x=0/1/2/3)

Bit	Name	Access	Description	Reset value
15	Reserved	RO	Reserved	0
[14:2]	R16_TMRx_DMA_BEG	RW	DMA data buffer begin address, the address must be 4-byte aligned.	XXXXh
[1:0]	Reserved	RO	Reserved	0

DMA End Buffer Address (R16_TMRx_DMA_END) (x=0/1/2/3)

Bit	Name	Access	Description	Reset value
15	Reserved	RO	Reserved	0
[14:2]	R16_TMRx_DMA_END	RW	DMA data buffer end address (not included), address must be 4-byte aligned.	XXXXh
[1:0]	Reserved	RO	Reserved	0

8.3 Functional Description and Configuration

8.3.1 Timing and Counting Functions

Each timer of the chip supports the longest time interval of 2^26 clock cycles and performs an incremental count mode. If the system clock cycle is 32MHz, the longest time interval is: 31.25nS*2^26 ≈ 2S. Each timer has an independent interrupt.

The operation steps for timing function are as follows:

(1) Set RB_TMR_ALL_CLEAR, clear R32_TMRx_COUNT and interrupt flag, etc.

(2) Set the R32_TMRx_CNT_END register to the time value that needs timing;
Time = Tsys*R32_TMRx_CNT_END;

(3) Clear RB_TMR_ALL_CLEAR, clear the timing mode corresponding to RB_TMR_MODE_IN;

(4) Optional steps, set R8_TMRx_INTER_EN register, set RB_TMR_IE_CYC_END to open the timing cycle interrupt;

(5) Set the RB_TMR_COUNT_EN in the R8_TMRx_CTRL_MOD register, and start the timer counting;

(6) When count value of R32_TMRx_COUNT is equal to that of R32_TMRx_CNT_END, the timing is completed. In this case, RB_TMR_IF_CYC_END in R8_TMRx_INT_FLAG is set to 1, which can be cleared by writing 1.

The operation steps for counting function are as follows:

(1) Set the corresponding I/O pin direction of counting as input;

(2) Set the count overflow final value in R32_TMRx_CNT_END;

(3) Configure R8_TMRx_CTRL_MOD, set the corresponding count mode of RB_TMR_MODE_IN and RM_TMR_CAP_COUNT, clear RB_TMR_ALL_CLEAR, select sample edge method by

RB_TMR_CAP_EDGE, set RB_TMR_COUNT_EN in R8_TMRx_CTRL_MOD to 1, enable counting function;

(4) Optional, set the corresponding interrupt enable register bit if it is needed to enable interrupt;

(5) Save current count value in R32_TMRx_COUNT. Every time the count value reaches final count value, RB_TMR_IE_CYC_END will be set to 1 and R32_TMRx_COUNT will be cleared to 0. Hardware interrupt is triggered if enabling interrupt.

8.3.2 PWM Function

Each timer of the chip has PWM function and DMA data loading function. The default output polarity of PWM can be set to high level or low level. The repeated output times of the same data can be selected as 1, 4, 8 or 16. This repeat function is combined with DMA to simulate the effect of DAC. The shortest time unit for PWM to output valid level is 1 system clock cycle, and the duty cycle of PWM can be dynamically modified to simulate special waveforms.

PWM operation steps are as follows:

(1) Set RB_TMR_ALL_CLEAR, empty and clear R32_TMRx_FIFO and interrupt flags, etc.

(2) Set the PWM total cycle register R32_TMRx_CNT_END, the value shall not be less than the value in R32_TMRx_FIFO register;

(3) Configure R8_TMRx_CTRL_MOD, clear RB_TMR_ALL_CLEAR, clear PWM mode corresponding to RB_TMR_MODE_IN, select the output polarity through RB_TMR_OUT_POLAR, and select the repetition times of the same data through RB_TMR_PWM_REPEAT as needed;

(4) Set the data register R32_TMRx_FIFO, the minimum value is 0, with the corresponding duty cycle of 0%; the maximum value is the same as that of R32_TMR_CNT_END, with the corresponding duty cycle of 100%; the calculation of duty cycle: R32_TMRx_FIFO/R32_TMRx_CNT_END. Can load continuous dynamic data through DMA, and simulate special waveforms combined with the repeated output times of the same data;

(5) Configure R8_TMRx_CTRL_MOD, set RB_TMR_COUNT_EN to start counting and RB_TMR_OUT_EN to allow PWM output;

(6) Set the I/O pin corresponding to PWM as output;

(7) Optional. If it is needed to enable interrupts, set the corresponding interrupt enable register bit;

(8) After a PWM cycle is completed, if an interrupt is enabled, the hardware interrupt will be triggered after RB_TMR_IF_DATA_ACT or RB_TMR_IF_CYC_END is set;

(9) The duty cycle of PWM can be dynamically changed by updating the data in R32_TMRx_FIFO. It is recommended to load it through DMA.

For example: Set the RB_TMR_OUT_POLAR bit to 0, R32_TMRx_FIFO to 6, R32_TMRx_CNT_END to 18, the basic timing diagram of PWM generation is as follows, and its duty cycle is: R32_TMRx_FIFO/R32_TMRx_CNT_END = 1/3.

Figure 8-1 PWM output timing diagram

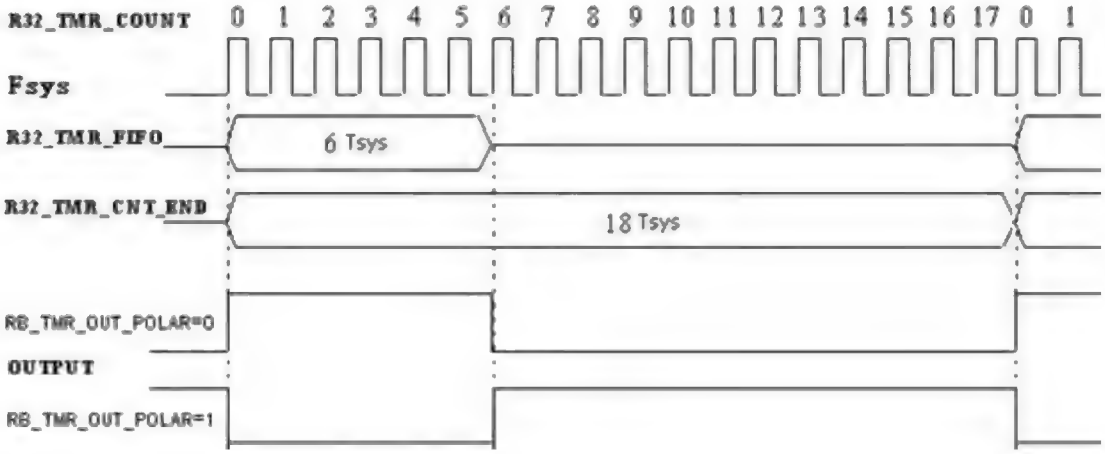

If RB_TMR_PWM_REPEAT is set to 00, it means that the above process is repeated once, 01 means repeating 4 times, 10 means that repeating 8 times, and 11 means repeating 16 times. After repeating, load the next data in FIFO and then continue.

8.3.3 Capture Function

Each timer of the chip is equipped with capture function and DMA data storage function. 3 capture modes can be selected: start from any edge trigger and end at any edge trigger, start from rising edge trigger and end at rising edge trigger, and start from falling edge trigger and end at falling edge trigger. The following table shows the description of capture trigger mode:

Table 8-5 Description of capture trigger mode

Capture mode selection bit RB_TMR_CATCH_EDGE	**Trigger Mode**	**Icon**
00	Not capture	None
01	Edge trigger edge to edge	
10	Falling edge to falling edge	
11	Rising edge to rising edge	

There are 2 trigger states in edge trigger mode, which can capture high level width or low-level width. When the highest bit (bit 25) of the valid data in data register R32_TMRx_FIFO is 1, high level is captured; when it is 0, low level is captured. If the bit 25 of consecutive sets of data is 1 (or 0), the width of the high (or low) level exceeds the timeout value, and needs to be combined and accumulated.

In the trigger modes from falling edge to falling edge and from rising edge to rising edge, an input change cycle can be captured. When the highest bit (bit 25) of the valid data in data register R32_TMRx_FIFO is 0, one cycle is normally sampled; when it is 1, the input change period exceeds the timeout value R32_TMRx_CNT_END, and the latter set of data needs to be added and accumulated as a single input change period.

The specific description is shown in the figure below:

Figure 8-2 Count the capture cycle with system clock

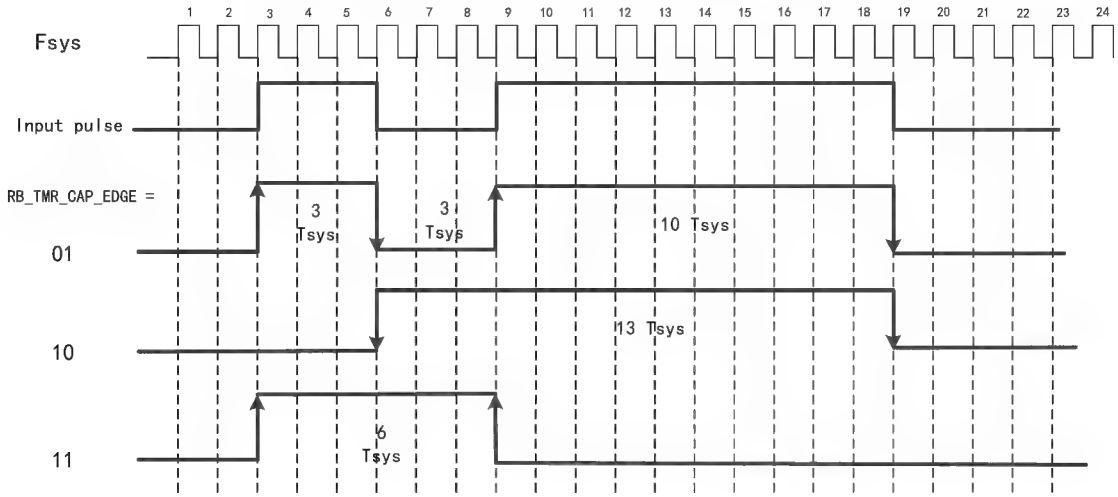

As shown in the figure above, sample once in each clock cycle:

When RB_TMR_CATCH_EDGE=01b, sampling is set to the mode of edge trigger, and the time width sampled is 3, 3, 10;

When RB_TMR_CATCH_EDGE=10b, sampling is set to the mode of falling edge to falling edge, and the time width sampled is 13;

When RB_TMR_CATCH_EDGE=11b, sampling is set to the mode of rising edge to rising edge, and the time width sampled is 6.

Operation steps for capture mode:

(1) Set RB_TMR_ALL_CLEAR, empty and clear R32_TMRx_FIFO and interrupt flags, etc.
(2) Set the direction of the I/O pin corresponding to capture as input;
(3) Set a reasonable capture timeout time in R32_TMRx_CNT_END, which can be used to generate a timeout interrupt when the input signal remains unchanged for a long time, and generate timeout data after the input signal does not change overtime (Bit 25 of data is 1, and the lower 25 bits can be accumulated backward);
(4) Configure R8_TMRx_CTRL_MOD, set the capture mode corresponding to RB_TMR_MODE_IN, select the edge mode of capture through RB_TMR_CAP_EDGE, set RB_TMR_COUNT_EN of R8_TMRx_CTRL_MOD as 1, and enable counting;
(5) Optional step: If it is needed to enable interrupts, set the corresponding interrupt enable register bit;
(6) To save the captured data in the way of DMA, you need to set the register R32_TMRx_DMA_BEG as the first address of buffer which stores the data captured, set the register R32_TMRx_DMA_END as the end address of buffer which stores the data captured (not included), and set the RB_TMR_DMA_ENABLE of R8_TMRx_CTRL_DMA as 1, and enable DMA function;
(7) Clear RB_TMR_ALL_CLEAR of R8_TMRx_CTRL_MOD, and start the capture function;
(8) Every time data is captured, RB_TMR_IF_DATA_ACT will be set as 1; if the interrupt is enabled, a hardware interrupt will be triggered; the captured data is stored in R32_TMRx_FIFO by default; if DMA is enabled, the captured data will be automatically stored in the data buffer set by DMA.

8.3.4 DMA Function

Each timer of the chip has DMA function. When using DMA to complete interrupt, you need to pay attention to the

configuration order of related registers.

The steps to enable DMA completion interrupt are as follows:

(1) Read R32_TMR1_DMA_NOW, and assign R32_TMR1_DMA_END to any value that is not equal to R32_TMR1_DMA_NOW (For example, the value can be R32 _ TMR1 _ DMA _ Now+0x100);

(2) Write 1 to clear bit RB_TMR_IF_DMA_END in R8_TMR1_INT_FLAG;

(3) Set bit RB_TMR_IE_DMA_END in R8_TMR1_INTER_EN to 1.

The steps to clear the DMA completion interrupt in acyclic mode are as follows:

(1) Read R32_TMR1_DMA_NOW, and assign R32_TMR1_DMA_END to any value that is not equal to R32_TMR1_DMA_NOW (Example: it can take the value of R32_TMR1_DMA_NOW + 0x100);

(2) Write 1 to clear bit RB_TMR_IF_DMA_END of R8_TMR1_INT_FLAG.

The steps to clear the DMA completion interrupt in cyclic mode are as follows:

(1) Write 1 to clear bit RB_TMR_IF_DMA_END of R8_TMR1_INT_FLAG.

Chapter 9 Universal Asynchronous Receiver-Transmitter (UART)

9.1 Introduction to UART

CH585 and CH584 provide 4 sets of full-duplex UARTs (UART0/1/2/3). CH591 provides 2 sets of full-duplex UARTs (UART0 and UART1). Full-duplex and half-duplex serial communication are supported. Among them, UART0 provides the transmit status pin for switching RS485, and supports MODEM signals CTS, DSR, RI, DCD, DTR and RTS.

9.1.1 Main Features

- Compatible with 16C550 asynchronous serial port and enhanced.
- 5/6/7/8 data bits, 1/2 stop bits.
- Support the verification modes of odd, even, no parity, blank 0 and flag 1, etc.
- Programmable communication baud rate, up to 9Mbps.
- Built-in 8-byte FIFO buffer, support 4 FIFO trigger stages.
- UART0 supports MODEM signals CTS, DSR, RI, DCD, DTR and RTS.
- UART0 supports automatic handshake and automatic transmission rate control of hardware flow control signals CTS and RTS, compatible with TL16C550C.
- Support serial frame error detection and Break circuit interval detection.
- Full-duplex and half-duplex serial communication are supported, and UART0 provides the transmit status pin for switching RS485.

9.2 Register Description

Table 9-1 UART0 registers

Name	Access address	Description	Reset value
R8_UART0_MCR	0x40003000	MODEM control register	0x00
R8_UART0_IER	0x40003001	Interrupt enable register	0x00
R8_UART0_FCR	0x40003002	FIFO control register	0x00
R8_UART0_LCR	0x40003003	Line control register	0x00
R8_UART0_IIR	0x40003004	Interrupt identification register	0x01
R8_UART0_LSR	0x40003005	Line status register	0x60
R8_UART0_MSR	0x40003006	MODEM status register	0xX0
R8_UART0_RBR	0x40003008	Receive buffer register	0xXX
R8_UART0_THR	0x40003008	Transmit hold register	0xXX
R8_UART0_RFC	0x4000300A	Receive FIFO count register	0x00
R8_UART0_TFC	0x4000300B	Transmit FIFO count register	0x00
R16_UART0_DL	0x4000300C	Baud rate divisor latch	0xXX
R8_UART0_DIV	0x4000300E	Prescaler divisor register	0xXX
R8_UART0_ADR	0x4000300F	Slave address register	0xFF

Table 9-2 UART1 registers

Name	Access address	Description	Reset value

R8_UART1_MCR	0x40003400	MODEM control register	0x00
R8_UART1_IER	0x40003401	Interrupt enable register	0x00
R8_UART1_FCR	0x40003402	FIFO control register	0x00
R8_UART1_LCR	0x40003403	Line control register	0x00
R8_UART1_IIR	0x40003404	Interrupt identification register	0x01
R8_UART1_LSR	0x40003405	Line status register	0x60
R8_UART1_RBR	0x40003408	Receive buffer register	0xXX
R8_UART1_THR	0x40003408	Transmit hold register	0xXX
R8_UART1_RFC	0x4000340A	Receive FIFO count register	0x00
R8_UART1_TFC	0x4000340B	Transmit FIFO count register	0x00
R16_UART1_DL	0x4000340C	Baud rate divisor latch	0xXX
R8_UART1_DIV	0x4000340E	Prescaler divisor register	0xXX

Table 9-3 UART2 registers

Name	Access address	Description	Reset value
R8_UART2_MCR	0x40003800	MODEM control register	0x00
R8_UART2_IER	0x40003801	Interrupt enable register	0x00
R8_UART2_FCR	0x40003802	FIFO control register	0x00
R8_UART2_LCR	0x40003803	Line control register	0x00
R8_UART2_IIR	0x40003804	Interrupt identification register	0x01
R8_UART2_LSR	0x40003805	Line status register	0x60
R8_UART2_RBR	0x40003808	Receive buffer register	0xXX
R8_UART2_THR	0x40003808	Transmit hold register	0xXX
R8_UART2_RFC	0x4000380A	Receive FIFO count register	0x00
R8_UART2_TFC	0x4000380B	Transmit FIFO count register	0x00
R16_UART2_DL	0x4000380C	Baud rate divisor latch	0xXX
R8_UART2_DIV	0x4000380E	Prescaler divisor register	0xXX

Table 9-4 UART3 registers

Name	Access address	Description	Reset value
R8_UART3_MCR	0x40003C00	MODEM control register	0x00
R8_UART3_IER	0x40003C01	Interrupt enable register	0x00
R8_UART3_FCR	0x40003C02	FIFO control register	0x00
R8_UART3_LCR	0x40003C03	Line control register	0x00
R8_UART3_IIR	0x40003C04	Interrupt identification register	0x01
R8_UART3_LSR	0x40003C05	Line status register	0x60
R8_UART3_RBR	0x40003C08	Receive buffer register	0xXX
R8_UART3_THR	0x40003C08	Transmit hold register	0xXX
R8_UART3_RFC	0x40003C0A	Receive FIFO count register	0x00
R8_UART3_TFC	0x40003C0B	Transmit FIFO count register	0x00
R16_UART3_DL	0x40003C0C	Baud rate divisor latch	0xXX
R8_UART3_DIV	0x40003C0E	Prescaler divisor register	0xXX

MODEM Control Register (R8_UARTx_MCR) (x=0/1/2/3)

Bit	Name	Access	Description	Reset value
7	RB_MCR_HALF	RW	Half-duplex transceiver mode control (only supported by UART0): 1: Enter half-duplex transceiver mode, transmit with priority, and receive when not transmitting; 0: Disable half-duplex mode.	0
6	RB_MCR_TNOW	RW	Status enable that DTR pin output is being transmitted (only supported by UART0): 1: Output the indication status of being transmitted to DTR pin, used to control the RS485 receive/transmit switch. 0: DTR pin is in normal function.	0
5	RB_MCR_AU_FLOW_EN	RW	CTS and RTS hardware automatic flow control enable (only supported by UART0): 1: Enable; 0: Disable; In the flow control mode, if this bit is 1, then UART will continue to send the next data only when it detects that the CTS pin input is valid (active low). Otherwise, the UART transmission will be suspended, and the CTS input status change will not generate MODEM status interrupt when this bit is 1. If this bit is 1 and RTS is 1, UART will automatically validate the RTS pin (active low) when receiver FIFO is empty. UART will automatically invalidate the RTS pin when the number of received bytes reaches the trigger point of FIFO and will re-validate the RTS pin when the receiver FIFO is empty. Hardware automatic flow control can be used to connect your own CTS pin to the other party's RTS pin and transmit your own RTS pin to the other party's CTS pin.	0
4	RB_MCR_LOOP	RW	Test mode of internal loop enable (only supported by UART0): 1: Enable the test mode of internal loop; 0: Disable the test mode of internal loop. In the test mode of the internal loop, all	0

			external output pins of the serial port are invalid, TXD internally returns to RXD, RTS internally returns to CTS, DTR internally returns to DSR, OUT1 internally returns to RI and OUT2 internally returns to DCD.	
3	RB_MCR_OUT2 RB_MCR_INT_OE	RW	UART interrupt request output control: 1: Enable to send request; 0: Disable.	0
2	RB_MCR_OUT1	RW	User-defined MODEM control (only supported by UART0), and no actual output pin is connected: 1: Set high; 0: Set low.	0
1	RB_MCR_RTS	RW	RTS signal output level control (only supported by UART0): 1: RTS signal output is valid (low level); 0: RTS signal output high level (default).	0
0	RB_MCR_DTR	RW	DTR signal output level control (only supported by UART0): 1: DTR signal output is valid (low level); 0: DTR signal output high level (default).	0

Interrupt Enable Register (R8_UARTx_IER) (x=0/1/2/3)

Bit	Name	Access	Description	Reset value
7	RB_IER_RESET	WZ	UART software reset control bit, automatically cleared: 1: Software resets UART; 0: Normal operation.	0
6	RB_IER_TXD_EN	RW	UART TXD pin output enable bit: 1: Enable pin output; 0: Disable pin output.	0
5	RB_IER_RTS_EN	RW	RTS pin output enable bit (only supported by UART0): 1: Enable output; 0: Disable output.	0
4	RB_IER_DTR_EN	RW	DTR pin output enable bit (only supported by UART0): 1: Enable output; 0: Disable output.	0
3	RB_IER_MODEM_CHG	RW	Modem input status change interrupt enable bit (only supported by UART0): 1: Enable interrupt; 0: Disable interrupt.	0
2	RB_IER_LINE_STAT	RW	Receive line status interrupt enable bit: 1: Enable interrupt; 0: Disable interrupt.	0
1	RB_IER_THR_EMPTY	RW	Transmit hold register empty interrupt enable bit: 1: Enable interrupt; 0: Disable interrupt.	0

0	RB_IER_RECV_RDY	RW	Receive data interrupt enable bit: 1: Enable interrupt; 0: Disable interrupt.	0

FIFO Control Register (R8_UARTx_FCR) (x=0/1/2/3)

Bit	Name	Access	Description	Reset value
[7:6]	RB_FCR_FIFO_TRIG	RW	Trigger points select of receiving FIFO interrupt and hardware flow control: 00: 1 byte; 01: 2 bytes; 10: 4 bytes; 11: 7 bytes. Used to set the trigger points of receiving FIFO interrupt and hardware flow control. For example: 10 corresponds to 4 bytes, that is, interrupt available for receiving data is generated when 4 bytes are received, and RTS pin is automatically invalidated when hardware flow control is enabled.	00b
[5:3]	Reserved	RO	Reserved	000b
2	RB_FCR_TX_FIFO_CLR	WZ	Transmit FIFO data clear enable bit, and automatically cleared: 1: Clear the data of transmitter FIFO (excluding TSR); 0: Not clear the data of transmitter FIFO.	0
1	RB_FCR_RX_FIFO_CLR	WZ	Receive FIFO data clear enable bit, and automatically cleared: 1: Clear the data of receiver FIFO (excluding RSR); 0: Not clear the data of receiver FIFO.	0
0	RB_FCR_FIFO_EN	RW	FIFO enable bit: 1: Enable 8-byte FIFO; 0: Disable FIFO. After disabling FIFO, it is 16C450 compatible mode, which means that there is only 1 byte in FIFO (RECV_TG1=0, RECV_TG0=0, FIFO_EN=1), and it is recommended to enable.	0

Line Control Register (R8_UARTx_LCR) (x=0/1/2/3)

Bit	Name	Access	Description	Reset value
7	RB_LCR_DLAB RB_LCR_GP_BIT	RW	UART general purpose bit, user-defined.	0
6	RB_LCR_BREAK_EN	RW	Force to generate BREAK line interval enable: 1: Forced to generate; 0: Not generate.	0
[5:4]	RB_LCR_PAR_MOD	RW	Parity bit format selection:	00b

			00: Odd; 01: Even; 10: Mark (MARK, set to 1); 11: Space (SPACE, cleared). Valid only when RB_LCR_PAR_EN is 1.	
3	RB_LCR_PAR_EN	RW	Parity bit enable: 1: Allow to generate parity bit when transmitting and check parity bit when receiving; 0: No parity bit.	0
2	RB_LCR_STOP_BIT	RW	Stop bit format set: 1: 2 stop bits; 0: 1 stop bit.	0
[1:0]	RB_LCR_WORD_SZ	RW	UART data length selection: 00: 5 data bits; 01: 6 data bits; 10: 7 data bits; 11: 8 data bits.	00b

Interrupt Identification Register (R8_UARTx_IIR) (x=0/1/2/3)

Bit	Name	Access	Description	Reset value
[7:6]	RB_IIR_FIFO_ID	RO	UART FIFO enable status: 11: FIFO has been enabled; 00: FIFO is not enabled.	00b
[5:4]	Reserved	RO	Reserved	00b
[3:0]	RB_IIR_INT_MASK	RO	Interrupt flag: If the RB_IIR_NO_INT bit is 0, an interrupt is generated, and it is needed to judge the interrupt source after reading. Please refer to Table 9-5 for details.	000b
0	RB_IIR_NO_INT	RO	UART no interrupt flag: 1: No interrupt; 0: Interrupt.	1

The meanings of bit RB_IIR_NO_INT of interrupt identification register R8_UARTx_IIR and each bit of RB_IIR_INT_MASK is shown in the following table:

Table 9-5 Meaning of RB_IIR_INT_MASK in IIR register

IIR register bit				Priority	Interrupt type	Interrupt source	Means of clearing interrupts
IID3	IID2	IID1	NOINT				
0	0	0	1	None	No interrupt	No interrupt	-
1	1	1	0	0	Bus address matching	The received one data is the UART bus address, and the address matches the preset slave value or the broadcast address. (Only supported by UART0)	Read IIR or disable multi-device mode
0	1	1	0	1	Receive line status	OVER_ERR/PAR_ERR/FRAM_ERR/BREAK_ERR	Read LSR
0	1	0	0	2	Receive data available	The number of bytes received reaches the trigger point of FIFO.	Read RBR

1	1	0	0	2	Receive data timeout	The next data is not received for more than 4 data periods.	Read RBR
0	0	1	0	3	THR register empty	Transmit hold register is empty, or RB_IER_THR_EMPTY bit is changed from 0 to 1 and triggered.	Read IIR or write THR
0	0	0	0	4	MODEM input change	Triggered by setting △CTS, △DSR, △RI and △DCD to 1.	Read MSR

Line Status Register (R8_UARTx_LSR) (x=0/1/2/3)

Bit	Name	Access	Description	Reset value
7	RB_LSR_ERR_RX_FIFO	RO	Receive FIFO error flag: 1: At least one PAR_ERR or FRAM_ERR or BREAK_ERR error in the receiver FIFO; 0: No error in receiver FIFO.	0
6	RB_LSR_TX_ALL_EMP	RO	THR and TSR empty flag. 1: Both are empty; 0: Both are not empty.	1
5	RB_LSR_TX_FIFO_EMP	RO	Transmit FIFO empty flag: 1: Transmit FIFO is empty; 0: Transmit FIFO is not empty.	1
4	RB_LSR_BREAK_ERR	RZ	BREAK line interval detection flag: 1: BREAK is detected; 0: BREAK is not detected.	0
3	RB_LSR_FRAME_ERR	RZ	Data frame error flag: 1: Frame error in the data being read from the receiver FIFO, and a valid stop bit is missing. 0: No error in the currently read data frame.	0
2	RB_LSR_PAR_ERR	RZ	Receive data Parity error flag: 1: Parity error in the data being read from the receiver FIFO. 0: The currently read data parity is correct.	0
1	RB_LSR_OVER_ERR	RZ	Receiver FIFO buffer overflow flag: 1: Has overflowed; 0: Not overflowed.	0
0	RB_LSR_DATA_RDY	RO	Receiver FIFO receive data flag: 1: Data in FIFO; 0: No data. After reading all the data in the FIFO, this bit will be automatically cleared.	0

MODEM Status Register (R8_UART0_MSR) (only supported by UART0)

Bit	Name	Access	Description	Reset value
7	RB_MSR_DCD	RO	DCD pin status: 1: DCD is active (low level); 0: DCD is inactive (high level).	0
6	RB_MSR_RI	RO	RI pin status:	0

			1: RI is active (low level); 0: RI is inactive (high level).	
5	RB_MSR_DSR	RO	DSR pin status: 1: DSR pin is active (low level); 0: DSR pin is inactive (high level).	X
4	RB_MSR_CTS	RO	CTS pin status: 1: CTS pin is active (low level); 0: CTS pin is inactive (high level).	X
3	RB_MSR_DCD_CHG	RZ	DCD input status change flag: 1: Has changed; 0: No change.	0
2	RB_MSR_RI_CHG	RZ	RI input status change flag: 1: Has changed; 0: No change.	0
1	RB_MSR_DSR_CHG	RZ	DSR pin input status change flag: 1: Has changed; 0: No change.	0
0	RB_MSR_CTS_CHG	RZ	CTS pin input status change flag: 1: Has changed; 0: No change.	0

Receive Buffer Register (R8_UARTx_RBR) (x=0/1/2/3)

Bit	Name	Access	Description	Reset value
[7:0]	R8_UARTx_RBR	RO	Data receive buffer register. If the DATA_RDY bit of LSR is 1, the received data can be read from this register; If FIFO_EN is 1, the data received from UART shift register RSR will be firstly stored in the receiver FIFO, and then read out through the register.	XXh

Transmit Hold Register (R8_UARTx_THR) (x=0/1/2/3)

Bit	Name	Access	Description	Reset value
[7:0]	R8_UARTx_THR	WO	Transmit hold register. Transmitter FIFO is included, used to write the data to be transmitted; if FIFO_EN is 1, the written data will be firstly stored in the transmitter FIFO, and then output one by one through the transmit shift register TSR.	XXh

Receive FIFO Count Register (R8_UARTx_RFC) (x=0/1/2/3)

Bit	Name	Access	Description	Reset value
[7:0]	R8_UARTx_RFC	RO	Data count in the current receiver FIFO.	00h

Transmit FIFO Count Register (R8_UARTx_TFC) (x=0/1/2/3)

Bit	Name	Access	Description	Reset value
[7:0]	R8_UARTx_TFC	RO	Data count in the current transmitter FIFO.	00h

Baud Rate Divisor Latch (R16_UARTx_DL) (x=0/1/2/3)

Bit	Name	Access	Description	Reset value
[15:0]	R16_UARTx_DL	RW	The 16-bit divisor is used to calculate the baud rate. Formula: Divisor = the serial internal reference clock Fuart / 16 / the required communication baud rate. For example: If the serial internal reference clock Fuart is 1.8432MHz and the required baud rate is 9600bps, then the divisor =1843200/16/9600=12.	XXXXh

Prescaler Divisor Register (R8_UARTx_DIV) (x=0/1/2/3)

Bit	Name	Access	Description	Reset value
[7:0]	R8_UARTx_DIV	RW	It is used to calculate the internal reference clock of UART, the lower 7 bits are valid. Formula: Divisor = Fsys*2 / internal reference clock of UART, the maximum value is 127.	XXh

Slave Address Register (R8_UART0_ADR) (only supported by UART0)

Bit	Name	Access	Description	Reset value
[7:0]	R8_UART0_ADR	RW	Slave address of UART0 during multi-device communication: FFh: Not used; Others: Slave address.	0FFh

R8_UART0_ADR presets the address when this device acts as a slave, it is used to automatically compare the received addresses during multi-device communication, and generate an interrupt when the address matches or when the broadcast address 0FFH is received. Meanwhile, it is allowed to receive subsequent data packets. Data is not received until the address matches. After it starts sending data or rewriting the R8_UART0_ADR register, stop receiving any data, until the address matches again next time or the broadcast address is received.

When R8_UART0_ADR is 0FFH or RB_LCR_PAR_EN=0, the automatic comparison function of bus address is disabled.

When R8_UART0_ADR is not 0FFH and RB_LCR_PAR_EN=1, the automatic comparison function of bus address is enabled, and the following parameters should be configured: RB_LCR_WORD_SZ is 11b to select method of 8 data bits. For the case when the address byte is MARK (that is, the bit 9 of data byte is 0), RB_LCR_PAR_MOD should be set to 10b. For the case when the address byte is SPACE (that is, the bit 9 of data byte is 1), RB_LCR_PAR_MOD should be set to 11b.

9.3 Functional Description and Configuration

UART0/1/2/3 output pins are all at 3.3V LVCMOS level. The pins in UART mode include: data transmission pins and MODEM contact signal pins (only supported by UART0). Data transmission pins include: TXD pin and RXD pin, both of which are at high level by default. MODEM contact signal pins include: CTS pin, DSR pin, RI pin, DCD pin, DTR pin, RTS pin, all of which are at high level by default.

All these MODEM contact signals can be used as general-purpose I/O pins, and the application program controls them and define their purposes.

4 sets of UARTs have built-in independent transceiver buffers and 8-byte FIFOs, support simplex, half-duplex or full-duplex UART communication. Serial data includes 1 low-level start bit, 5/6/7/8 data bits, 0/1 additional check bit or flag bit, 1/2 high-level stop bits, and supports odd/even/mark/blank checking. The baud rate error of the serial port transmitting signal is less than 0.5%, and the allowable baud rate error of the serial port receiving signal is not more than 2%.

9.3.1 Baud Rate Calculation

1) Calculate the internal reference clock Fuart of serial port, set the R8_UARTx_DIV register, the maximum value is 127, and usually 1 is written.
2) Calculate the baud rate and set R16_UARTx_DL register.
   Baud rate =Fsys * 2 / R8_UARTx_DIV / 16 / R16_UARTx_DL

9.3.2 UART Transmission

'THR register empty' interrupt UART_II_THR_EMPTY sent by UART means that the current transmitter FIFO is empty. The interrupt is cleared when the IIR register is read, or cleared when the next data is written to THR. If only one byte is written to THR, it will soon generate again a request to transmit THR register empty interrupt as the byte is quickly transferred to the transmitter shift register (TSR) to start transmitting. At this point, the next data ready to be transmitted can be written. After all the data in TSR register is removed, UART transmission is completed. At this time, RB_LSR_TX_ALL_EMP bit of LSR register becomes active at 1.

In interrupt trigger mode, when THR empty interrupt from UART is received, if FIFO is enabled, up to 8 bytes can be written to THR and FIFO at a time, and then will be transmitted automatically by the controller in sequence; if FIFO is disabled, only one byte can be written at a time. If no data needs to be transmitted, exit directly (The interrupts have been automatically cleared when IIR is read before).

In the query mode, whether the transmitter FIFO is empty can be judged according to RB_LSR_TX_FIFO_EMP bit of LSR. When this bit is 1, the data can be written to THR and FIFO. If FIFO is enabled, up to 8 bytes can be written at a time.

R8_UARTx_TFC register can also be read to determine the number of remaining data to be sent in the current FIFO. If it is not equal to 8, continue to write the data to be sent into the FIFO, and that can save filling time.

9.3.3 UART Reception

UART receive data available interrupt UART_II_RECV_RDY means that the number of existing data bytes in the receiver FIFO has reached or exceeded the FIFO trigger points set and selected by RB_FCR_FIFO_TRIG of FCR. The interrupt is cleared when the data is read from RBR to cause the number of bytes in the FIFO less than that of the FIFO trigger points.

UART receive data timeout interrupt UART_II_RECV_TOUT means that there is at least 1-byte data in the receiver FIFO, and the waiting time is equivalent to the time of receiving 4 data starting from the last time when UART receives data and the last time when the system takes the data. The interrupt is cleared when a new data is received again or after the MCU reads RBR once. When receiver FIFO is empty, RB_LSR_DATA_RDY bit of LSR is 0; when there is data in the receiver FIFO, it is valid when RB_LSR_DATA_RDY bit is 1.

In the interrupt trigger mode, R8_UARTx_RFC register can be read to query the remaining data count in the current FIFO after receiving UART receive data timeout interrupt, and read all the data directly, or continuously query the RB_LSR_DATA_RDY of LSR. If this bit is valid, read the data until this bit becomes invalid. After receiving UART receive data available interrupt, read the data for the number of bytes set by RB_FCR_FIFO_TRIG from RBR at one time, or read all the data in the current FIFO according to the RB_LSR_DATA_RDY bit and the R8_UARTx_RFC register.

In query mode, whether the receiver FIFO is empty can be judged according to the RB_LSR_DATA_RDY bit of LSR, or read the R8_UARTx_RFC register to get the data count in the current FIFO and get all the data received by UART.

9.3.4 Hardware Flow Control

Hardware flow control includes automatic CTS (RB_MCR_AU_FLOW_EN is set to 1) and automatic RTS (RB_MCR_AU_FLOW_EN and RB_MCR_RTS are both set to 1).

If automatic CTS is enabled, CTS pin must be active before UART sends data. The serial port transmitter detects CTS pin before sending the next data. When the CTS pin is active, the transmitter sends the next data. In order to ensure that the transmitter stops sending the later data, CTS pin must be disabled before the middle time of the last stop bit currently being sent. The automatic CTS function reduces the interrupt applied to the system. When hardware flow control is enabled, a change in CTS pin level does not trigger a MODEM interrupt as the controller automatically controls the transmitter based on CTS pin status. If automatic RTS is enabled, RTS pin output will be valid only when there is enough space in FIFO to receive data, and RTS pin output is invalid when the receiver FIFO is full. RTS pin output will be valid if all the data in the receiver FIFO is taken or cleared. When the trigger point of the receiver FIFO is reached (The number of existing bytes in the receiver FIFO is not less than the number of bytes set by RB_FCR_FIFO_TRIG of FCR), RTS pin output is invalid, and the other transmitter is allowed to send another data after RTS pin is inactive. Once the data in the receiver FIFO is emptied, RTS pin will be automatically re-enabled, so that the other transmitter resumes transmission. If both automatic CTS and automatic RTS are enabled (Both RB_MCR_AU_FLOW_EN and RB_MCR_RTS of MCR register are 1), when its own RTS pin is connected to the other CTS pin, the other side will not send data unless there is enough space in the receiver FIFO of the other side. Therefore, with hardware flow control, FIFO overflow and timeout errors during serial port reception can be avoided.

Chapter 10 Serial Peripheral Interface (SPI)

10.1 Introduction to SPI

SPI is a full-duplex serial interface with a host and several slaves connected to the bus, and only a pair of host and slave is communicating at the same time. Usually, SPI interface consists of 4 pins: SPI chip selected pin SCS, SPI clock pin (SCK), SPI serial data pin MISO (master input/slave output pin) and SPI serial data pin MOSI (master output/slave input pin).

10.1.1 Main Features

The CH585 chip provides 2 SPI interfaces (SPI0 and SPI1), while the CH584 chip only provides SPI0 with the following characteristics:

- Support both master mode and slave mode.
- Compatible with Serial Peripheral Interface (SPI) specification.
- Data transfer modes: mode0 and mode3.
- 8-bit data transmission mode, optional data bit sequence: low bits of a byte are in front or high bits are in front.
- Clock frequency can be up to half of the system clock frequency (Fsys).
- 8-byte FIFO.
- Slave mode supports the first byte as command mode or data stream mode.
- Support DMA, so the data transmission efficiency is higher.

10.2 Register Description

Table 10-1 SPI0 registers

Name	Access address	Description	Reset value
R8_SPI0_CTRL_MOD	0x40004000	SPI0 mode control register	0x02
R8_SPI0_CTRL_CFG	0x40004001	SPI0 configuration register	0x00
R8_SPI0_INTER_EN	0x40004002	SPI0 interrupt enable register	0x00
R8_SPI0_CLOCK_DIV R8_SPI0_SLAVE_PRE	0x40004003	SPI0 clock divider register in master mode SPI0 preset data register in slave mode	0x10
R8_SPI0_BUFFER	0x40004004	SPI0 data buffer	0xXX
R8_SPI0_RUN_FLAG	0x40004005	SPI0 working status register	0x00
R8_SPI0_INT_FLAG	0x40004006	SPI0 interrupt flag register	0x40
R8_SPI0_FIFO_COUNT	0x40004007	SPI0 transceiver FIFO count register	0x00
R16_SPI0_TOTAL_CNT	0x4000400C	SPI0 transceiver data total length register	0x0000
R8_SPI0_FIFO	0x40004010	SPI0 data FIFO register	0xXX
R8_SPI0_FIFO_COUNT1	0x40004013	SPI0 transceiver FIFO count register	0x00
R32_SPI0_DMA_NOW	0x40004014	SPI0 DMA buffer current address	0x000XXXXX
R32_SPI0_DMA_BEG	0x40004018	SPI0 DMA buffer start address	0x000XXXXX
R32_SPI0_DMA_END	0x4000401C	SPI0 DMA buffer end address	0x000XXXXX

Table 10-2 SPI1 registers

Name	Access address	Description	Reset value
R8_SPI1_CTRL_MOD	0x40004400	SPI0 mode control register	0x02
R8_SPI1_CTRL_CFG	0x40004401	SPI0 configuration register	0x00
R8_SPI1_INTER_EN	0x40004402	SPI0 interrupt enable register	0x00
R8_SPI1_CLOCK_DIV	0x40004403	SPI1 clock divider register in master mode	0x10
R8_SPI1_BUFFER	0x40004404	SPI0 data buffer	0xXX
R8_SPI1_RUN_FLAG	0x40004405	SPI0 working status register	0x00
R8_SPI1_INT_FLAG	0x40004406	SPI0 interrupt flag register	0x40
R8_SPI1_FIFO_COUNT	0x40004407	SPI0 transceiver FIFO count register	0x00
R16_SPI1_TOTAL_CNT	0x4000440C	SPI0 transceiver data total length register	0x00
R8_SPI1_FIFO	0x40004410	SPI0 data FIFO register	0xXX
R8_SPI1_FIFO_COUNT1	0x40004413	SPI0 transceiver FIFO count register	0x00

SPI Mode Control Register (R8_SPIx_CTRL_MOD) (x=0/1)

Bit	Name	Access	Description	Reset value
7	RB_SPI_MISO_OE	RW	MISO pin output enable (can be used at data line switching direction in 2-wire mode): 1: MISO output enabled; 0: MISO output disabled.	0
6	RB_SPI_MOSI_OE	RW	MOSI pin output enable: 1: MOSI output enabled; 0: MOSI output disabled.	0
5	RB_SPI_SCK_OE	RW	SCK pin output enable: 1: SCK output enabled; 0: SCK output disabled.	0
4	RB_SPI_FIFO_DIR	RW	FIFO direction: 1: Input (receive data); 0: Output (transmit data).	0
3	RB_SPI_SLV_CMD_MOD	RW	First byte mode selection in SPI0 slave mode (only supported by SPI0): 1: First byte command mode; 0: Data stream mode. In the first byte command mode, it will be regarded as a command code when receiving the first byte of data after the SPI chip select is valid and RB_SPI_IF_FST_BYTE will be set to 1.	0
3	RB_SPI_MST_SCK_MOD	RW	Clock idle mode selection in master mode: 1: Mode3 (SCK is at high level when idle); 0: Mode0 (SCK is at low level when idle).	0
2	RB_SPI_2WIRE_MOD	RW	2-wire or 3-wire SPI mode selection in slave mode: 1: 2-wire mode/halfduplex (SCK/MISO); 0: 3-wire mode/full duplex (SCK/MOSI/MISO).	0

1	RB_SPI_ALL_CLEAR	RW	SPI FIFO/counter/interrupt flag clear: 1: Force to empty and clear; 0: Not clear.	1
0	RB_SPI_MODE_SLAVE	RW	SPI0 master/slave mode selection (only supported by SPI0): 1: Slave mode; 0: Master mode.	0

SPI Configuration Register (R8_SPIx_CTRL_CFG) (x=0/1)

Bit	Name	Access	Description	Reset value
7	Reserved	RO	Reserved	0
6	RB_SPI_MST_DLY_EN	RW	Input delay enable in master mode: 1: Enable, used for high-speed applications such as SPI clock close to half of Fsys; 0: Disable, regular applications.	0
5	RB_SPI_BIT_ORDER	RW	SPI data bit order selection: 1: LSB first, 0: MSB first.	0
4	RB_SPI_AUTO_IF	RW	Enable the function of automatically clearing flag bit RB_SPI_IF_BYTE_END when accessing BUFFER/FIFO: 1: Enable; 0: Disable.	0
3	Reserved	RO	Reserved	0
2	RB_SPI_DMA_LOOP	RW	DMA address loop enable (only supported by SPI0): 1: Enable address loop; 0: Disable address loop. If the DMA address loop is enabled, when the DMA address is added to the set end address, the auto loop points to the set first address.	0
1	Reserved	RO	Reserved	0
0	RB_SPI_DMA_ENABLE	RW	DMA enable (only supported by SPI0): 1: Enable; 0: Disable.	0

SPI Interrupt Enable Register (R8_SPIx_INTER_EN) (x=0/1)

Bit	Name	Access	Description	Reset value
7	RB_SPI_IE_FST_BYTE	RW	In the first byte command mode of slave mode, first byte interrupt receive enable (only supported by SPI0): 1: Enable receiving the first byte interrupt; 0: Disable receiving the first byte interrupt.	0
[6:5]	Reserved	RO	Reserved	0
4	RB_SPI_IE_FIFO_OV	RW	FIFO overflow (FIFO is full when receiving, or FIFO is empty when transmitting) interrupt enable (only supported by SPI0):	0

			1: Interrupt enabled; 0: Interrupt disabled.	
3	RB_SPI_IE_DMA_END	RW	DMA end interrupt enable (only supported by SPI0): 1: Interrupt enabled; 0: Interrupt disabled.	0
2	RB_SPI_IE_FIFO_HF	RW	More than half of FIFO used interrupt enable: 1: Interrupt enabled; 0: Interrupt disabled.	0
1	RB_SPI_IE_BYTE_END	RW	SPI single byte transmission completion interrupt enable: 1: Interrupt enabled; 0: Interrupt disabled.	0
0	RB_SPI_IE_CNT_END	RW	SPI all byte transmission completion interrupt enable: 1: Interrupt enabled; 0: Interrupt disabled.	0

SPI Clock Divider Register in Master Mode (R8_SPIx_CLOCK_DIV) (x=0/1)

Bit	Name	Access	Description	Reset value
[7:0]	R8_SPI_CLOCK_DIV	RW	Frequency division factor in master mode, the minimum value is 2, up to 254. Fsck= Fsys/frequency division factor.	10h

SPI Preset Data Register in Slave Mode (R8_SPI0_SLAVE_PRE) (only supported by SPI0)

Bit	Name	Access	Description	Reset value
[7:0]	R8_SPI0_SLAVE_PRE	RW	Preset data first returned in slave mode. Used to receive the returned data after first byte of data.	10h

SPI Data Buffer (R8_SPIx_BUFFER) (x=0/1)

Bit	Name	Access	Description	Reset value
[7：0]	R8_SPIx_BUFFER	RW	SPI data transmit and receive buffer.	XXh

SPI Working Status Register (R8_SPIx_RUN_FLAG) (x=0/1)

Bit	Name	Access	Description	Reset value
7	RB_SPI_SLV_SELECT	RO	Chip select status in slave mode (only supported by SPI0): 1: Being selected; 0: No chip selected.	0
6	RB_SPI_SLV_CS_LOAD	RO	First loading status after chip select in slave mode (only supported by SPI0): 1: Being loading R8_SPI0_SLAVE_PRE;	0

			0: Not yet loaded or has completed.	
5	RB_SPI_FIFO_READY	RO	FIFO ready: 1: FIFO is ready (R16_SPIx_TOTAL_CNT is not 0, and the FIFO is not full when receiving or the FIFO is not empty when transmitting); 0: FIFO is not ready.	0
4	RB_SPI_SLV_CMD_ACT	RO	Command received completion status in slave mode, that is, completing the exchange of first byte data (only supported by SPI0): 1: That has just been exchanged is the first byte; 0: The first byte has not been exchanged or it is not the first byte.	0
[3:0]	Reserved	RO	Reserved	0

SPI Interrupt Flag Register (R8_SPIx_INT_FLAG) (x=0/1)

Bit	Name	Access	Description	Reset value
7	RB_SPI_IF_FST_BYTE	RW1Z	First byte received flag in slave mode (only supported by SPI0): 1: The first byte has been received; 0: The first byte is not received.	0
6	RB_SPI_FREE	RO	Current SPI free: 1: Free; 0: Not free.	1
5	Reserved	RO	Reserved	0
4	RB_SPI_IF_FIFO_OV	RW1Z	FIFO overflow (FIFO is full when receiving or FIFO is empty when transmitting) flag. Write 1 to reset: 1: Overflow; 0: Not overflow.	0
3	RB_SPI_IF_DMA_END	RW1Z	DMA end flag (only supported by SPI0). Write 1 to reset: 1: End; 0: Not end.	X
2	RB_SPI_IF_FIFO_HF	RW1Z	More than half of FIFO used (FIFO>=4 when receiving or FIFO<4 when transmitting) flag. Write 1 to reset: 1: More than half of FIFO has been used; 0: FIFO has been used not more than half.	0
1	RB_SPI_IF_BYTE_END	RW1Z	SPI single byte transfer end flag. Write 1 to reset: 1: End; 0: Not end.	0

0	RB_SPI_IF_CNT_END	RW1Z	SPI all byte transfer end flag. Write 1 to reset: 1: All byte transfer ends; 0: All byte transfer not end.	1

SPI Transceiver FIFO Count Register (R8_SPIx_FIFO_COUNT) (x=0/1)

Bit	Name	Access	Description	Reset value
[7:4]	Reserved	RO	Reserved	0
[3:0]	R8_SPIx_FIFO_COUNT	RW	Current byte count in FIFO.	0

SPI Transceiver Data Total Length Register (R16_SPIx_TOTAL_CNT) (x=0/1)

Bit	Name	Access	Description	Reset value
[15:12]	Reserved	RO	Reserved	0
[11:0]	RB_SPIx_TOTAL_CNT	RW	Total number of bytes of SPI data sent and received in host mode, with the lower 12 bits valid. Up to 4095 bytes can be sent and received at one time when using DMA. Slave mode is not supported.	0

SPI Data FIFO Register (R8_SPIx_FIFO) (x=0/1)

Bit	Name	Access	Description	Reset value
[7:0]	R8_SPIx_FIFO	RO/ WO	Data FIFO register.	XXh

The registers R8_SPIx_BUFFER and R8_SPIx_FIFO are both SPI data related registers, and the main differences between them are:

Reading R8_SPIx_BUFFER means to obtain the data from the last exchange of SPI, and it does not affect FIFO and R8_SPIx_FIFO_COUNT;

Writing to R8_SPIx_BUFFER in master mode means to send the byte directly, and the write operation in slave mode is not defined;

Reading R8_SPIx_FIFO means to obtain the data from the earliest exchange in FIFO, which will reduce FIFO and R8_SPIx_FIFO_COUNT;

Writing to R8_SPI0_FIFO means to temporarily store the data in FIFO. In slave mode, the external SPI host decides when to take it. In master mode, the transmission is automatically started when R16_SPIx_TOTAL_CNT is not 0.

SPI Transceiver FIFO Count Register (R8_SPIx_FIFO_COUNT1) (x=0/1)

Bit	Name	Access	Description	Reset value
[7:4]	Reserved	RO	Reserved	0
[3:0]	R8_SPI0_FIFO_COUNT1	RW	Current byte count in FIFO. The same as R8_SPIx_FIFO_COUNT.	0

SPI0 DMA Buffer Current Address (R32_SPI0_DMA_NOW)

Bit	Name	Access	Description	Reset value
[31:17]	Reserved	RO	Reserved	0

[15:0]	R16_SPI0_DMA_NOW	RW	DMA data buffer current address. It can be used to calculate the number of conversions. COUNT=SPI0_DMA_NOW-SPI0_DM A_BEG.	XXXXh

SPI0 DMA Buffer Start Address (R32_SPI0_DMA_BEG)

Bit	Name	Access	Description	Reset value
[31:17]	Reserved	RO	Reserved	0
[16:0]	R16_SPI0_DMA_BEG	RW	DMA data buffer start address	XXXXh

SPI0 DMA Buffer End Address (R32_SPI0_DMA_END)

Bit	Name	Access	Description	Reset value
[31:17]	Reserved	RO	Reserved	0
[16:0]	R16_SPI0_DMA_END	RW	DMA data buffer end address (not included)	XXXXh

10.3 SPI Transfer Frame Formats

SPI supports 2 transfer frame formats, mode0 and mode3, which can be selected by setting RB_SPI_MST_SCK_MOD in R8_SPIx_CTRL_MOD. Always sample and input serial data at rising edge of SCK, and output serial data at falling edge.

The data transmission formats are shown in the figures below:

Mode0: RB_SPI_MST_SCK_MOD = 0

Figure 10-1 Transfer format of SPI mode0

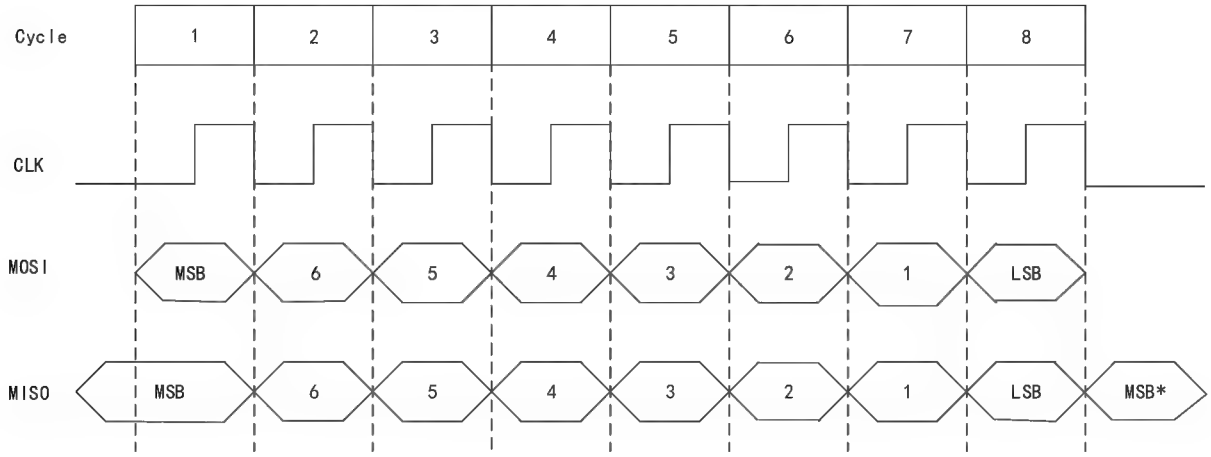

Mode3: RB_SPI_MST_SCK_MOD = 1

Figure 10-2 Transfer format of SPI mode3

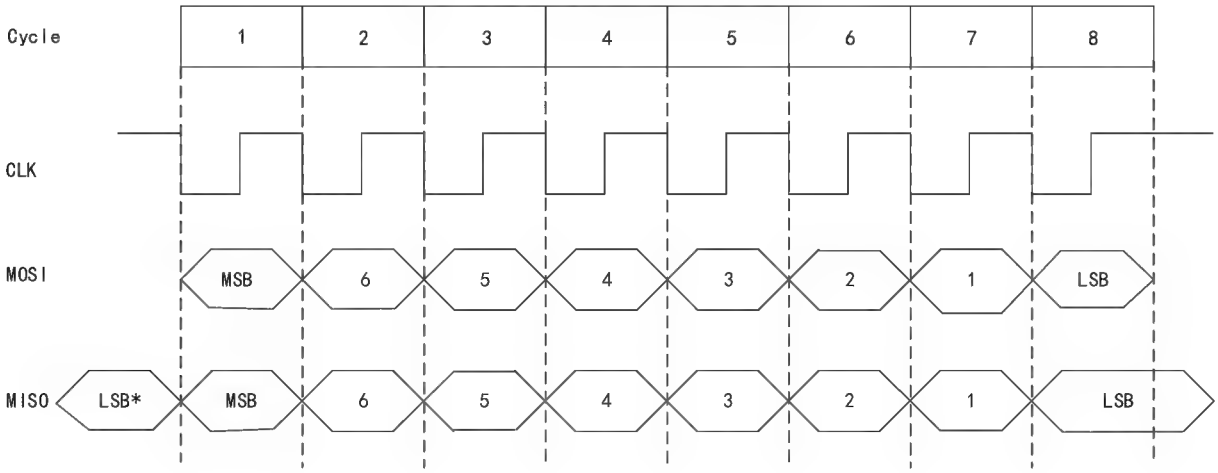

10.4 SPI Configuration

10.4.1 Master Mode

In SPI master mode, serial clock is generated on SCK pin, and chip select pin can be specified as any I/O pin.

Configuration procedure:

(1) Set R8_SPIx_CLOCK_DIV, to configure SPI clock frequency;

(2) Set RB_SPI_MODE_SLAVE in R8_SPIx_CTRL_MOD to 0, to configure SPI to master mode;

(3) Set RB_SPI_MST_SCK_MOD in R8_SPIx_CTRL_MOD, to select clock idle mode0 or mode3;

(4) Set the RB_SPI_FIFO_DIR in R8_SPIx_CTRL_MOD to configure the FIFO direction. If it is 1, FIFO is used to receive. If it is 0, FIFO is used to transmit;

(5) Set RB_SPI_MOSI_OE and RB_SPI_SCK_OE in R8_SPIx_CTRL_MOD to 1, and set RB_SPI_MISO_OE to 0, and set GPIO direction configuration register (R32_PA/PB_DIR), to set the MOSI pin and SCK pin as output, and MISO pin as input;

(6) SCK remains unchanged in 2-wire mode, RB_SPI_MOSI_OE=0, MOSI is not used. Input (same as 3-wire mode, RB_SPI_MISO_OE=0 and the pin is set as input) and output (RB_SPI_MISO_OE=1 and the pin is set as output) are realized by MISO half-duplex, and the directions are switched manually;

(7) Optional. If DMA is enabled, it is needed to write the start address of transceiver buffer to R16_SPI_DMA_BEG and write the end address (not included) to R32_SPI_DMA_END. It is recommended to set RB_SPI_DMA_ENABLE after setting RB_SPI_FIFO_DIR. If R32_SPIx_TOTAL_CNT is confirmed as 0, RB_SPI_DMA_ENABLE can be first set to 1 to enable DMA function.

Data transmission:

(1) Set RB_SPI_FIFO_DIR to 0, and the current FIFO direction is output;

(2) Write to the R16_SPIx_TOTAL_CNT register, and set the length of the data to be sent;

(3) Write to the R8_SPIx_FIFO register and write the data to be transmitted to FIFO. If R8_SPIx_FIFO_COUNT is less than FIFO capacity, continue to write FIFO. If DMA is enabled, DMA will automatically load FIFO to complete this step;

(4) As long as R16_SPIx_TOTAL_CNT is not 0 and there is data in FIFO, SPI master will automatically transmit data, otherwise, it will pause;

(5) Wait until R16_SPIx_TOTAL_CNT register becomes 0, indicating that the data transmission is completed. If only one byte is sent, you can also query and wait for RB_SPI_FREE to be idle or wait for R8_SPIx_FIFO_COUNT to be 0.

Data reception:

(1) Set RB_SPI_FIFO_DIR to 1, to set the current FIFO direction to input;
(2) Write to the R16_SPIx_TOTAL_CNT register, to set the length of the data to be received;
(3) As long as R16_SPIx_TOTAL_CNT is not 0 and FIFO is not full, SPI master will automatically receive data, otherwise, it will pause;
(4) Wait until R8_SPIx_FIFO_COUNT register is not 0, indicating that the return data is received, the value read in R8_SPI0_FIFO is the received data. If DMA is enabled, DMA will automatically read FIFO to complete this step.

10.4.2 Slave Mode

SPI0 supports the slave mode. In the slave mode, SCK pin is used to receive the serial clock of SPI master connected to the external.

Configuration procedure:

(1) Set RB_SPI_MODE_SLAVE in R8_SPI0_CTRL_MOD to 1, to configure SPI0 to slave mode;
(2) Set RB_SPI_SLV_CMD_MOD in R8_SPI0_CTRL_MOD as needed, to select the slave first byte mode or data stream mode;
(3) Set RB_SPI_FIFO_DIR in R8_SPI0_CTRL_MOD, to configure the FIFO direction. If it is 1, FIFO is used to receive; if it is 0, FIFO is used to transmit;
(4) Set RB_SPI_MOSI_OE and RB_SPI_SCK_OE in R8_SPI0_CTRL_MOD to 0, and set RB_SPI_MISO_OE to 1, and set GPIO direction configuration register (R32_PA/PB_DIR) to make MOSI pin, SCK pin and SCS pin as input, MISO pin as input (support connect multiple slaves under the bus; MISO will automatically switch to output after chip select; one master with one slave is also supported) or output (only for connection of one master with one slave). In SPI slave mode, the I/O pin direction of MISO can be set as output by GPIO direction configuration register, it can also automatically switch to output during the period of valid SPI chip select. But its output data is selected by RB_SPI_MISO_OE, it outputs SPI data when it is 1, and it outputs data of GPIO data output register when it is 0. It is recommended to set the MISO pin as input, so that MISO does not output when chip select is invalid, so that SPI bus can be shared during multiple-device operation;
(5) Optional, set the preset data register (R8_SPI0_SLAVE_PRE) in SPI0 slave mode, used to be automatically loaded into the buffer for the first time after chip select for external output. After 8 clocks (that is, the first data byte is exchanged between the master and the slave), the controller will obtain the first data byte (command code) sent by the external SPI host, and the external SPI host obtains the preset data (status value) in R8_SPI0_SLAVE_PRE through exchange. The bit7 of R8_SPI0_SLAVE_PRE will be automatically loaded into the MISO pin during SCK low level period after the SPI chip select is valid. For SPI mode 0 (CLK is at low level by default), if the bit7 of R8_SPI0_SLAVE_PRE is preset, the external SPI host will obtain the preset value of bit7 of R8_SPI0_SLAVE_PRE by inquiring the MISO pin when the SPI chip select is valid but has no data transmission, thereby the value of bit7 of R8_SPI0_SLAVE_PRE can be obtained only by a valid SPI chip select (Usually a busy status is provided for the host, so that the host can quickly query);
(6) Optional. If DMA is enabled, it is needed to write the start address of transceiver buffer to R16_SPI_DMA_BEG and write the end address (not included) to R16_SPI_DMA_END. It is recommended to set RB_SPI_DMA_ENABLE after setting RB_SPI_FIFO_DIR.

Data transmission:

(1) Set RB_SPI_FIFO_DIR in R8_SPI0_CTRL_MOD to 0, and the current FIFO direction as output;
(2) Optional step. If DMA is enabled, it is needed to set RB_SPI_DMA_ENABLE to 1 to enable DMA function;
(3) Write multiple transmission data into FIFO register R8_SPI0_FIFO, and the external host determines when to take it away. If DMA is enabled, DMA will automatically load FIFO to complete this step;
(4) Query R8_SPI0_FIFO_COUNT, if it is not full, continue to write data to be sent to FIFO.

Data reception:

(1) Set RB_SPI_FIFO_DIR of R8_SPI0_CTRL_MOD to 1, and the current FIFO direction as input;
(2) Optional step. If DMA is enabled, it is needed to set RB_SPI_DMA_ENABLE to 1 to enable DMA function;
(3) Query R8_SPI0_FIFO_COUNT, if it is not empty, the data has been received and the data will be taken away by reading R8_SPI0_FIFO. If DMA is enabled, DMA will automatically read FIFO to complete this step;
(4) For reception of the single byte data, R8_SPI0_BUFFER can be read directly without using FIFO.

10.5 SPI Timing

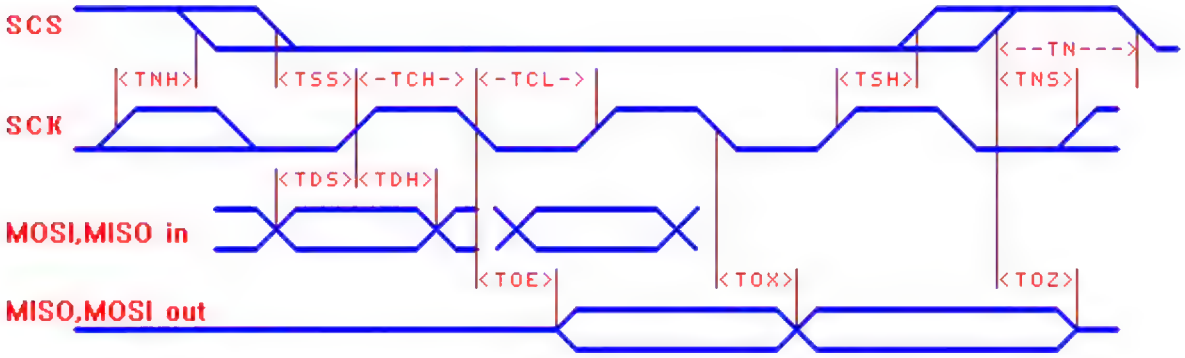

Name	Parameter description (TA=25°C, VIO33=3.3V)	Min.	Typ.	Max.	Unit
TSS	Setup time of valid SCS before SCK rising edge	Tsys*1.05			nS
TSH	Hold time of valid SCS before SCK rising edge	Tsys*1.05			nS
TNS	Setup time of invalid SCS before SCK rising edge	15			nS
TNH	Hold time of invalid SCS before SCK rising edge	15			nS
TN	Time of invalid SCS (interval time of SPI operation)	Tsys*2			nS
TCH	Time of SCK clock at high level	Tsys*0.55			nS
TCL	Time of SCK clock at low level	Tsys*0.55			nS
TDS	Setup time of MOSI/MISO input before SCK rising edge	8			nS
TDH	Hold time of MOSI/MISO input before SCK rising edge	5			nS
TOE	SCK falling edge to MISO/MOSI output valid	0		18	nS
TOX	SCK falling edge to MISO/MOSI output change	0	5	16	nS
TOZ	SCS invalid to MISO/MOSI output invalid	2		24	nS

Note: Tsys is the cycle of system clock frequency (1/Fsys).

Chapter 11 PWM

11.1 Introduction to PWM

In addition to the 4 × 26-bit PWM outputs provided by the timer, the system also provides 8 × 8-bit PWM outputs (PWM4 ~ PWM11) or 6 × 16-bit PWM outputs (PWM4 ~ PWM9) with adjustable duty cycle and a fixed selectable PWM period of 8 cycles for simple operation.

11.2 Register Description

Table 11-1 PWMx registers

Name	Access address	Description	Reset value
R8_PWM_OUT_EN	0x40005000	PWMx output enable register	0x00
R8_PWM_POLAR	0x40005001	PWMx output polarity configuration register	0x00
R8_PWM_CONFIG	0x40005002	PWMx configuration register	0x0X
R8_PWM_CLOCK_DIV	0x40005003	PWMx clock divider register	0x00
R32_PWM4_7_DATA	0x40005004	PWM4/5/6/7 data hold register	0xXXXXXXXX
R8_PWM4_DATA	0x40005004	PWM4 data hold register	0xXX
R8_PWM5_DATA	0x40005005	PWM5 data hold register	0xXX
R8_PWM6_DATA	0x40005006	PWM6 data hold register	0xXX
R8_PWM7_DATA	0x40005007	PWM7 data hold register	0xXX
R32_PWM8_11_DATA	0x40005008	PWM8/9/10/11 data hold register	0xXXXXXXXX
R8_PWM8_DATA	0x40005008	PWM8 data hold register	0xXX
R8_PWM9_DATA	0x40005009	PWM9 data hold register	0xXX
R8_PWM10_DATA	0x4000500A	PWM10 data hold register	0xXX
R8_PWM11_DATA	0x4000500B	PWM11 data hold register	0xXX
R8_PWM_INT_CTRL	0x4000500C	PWMx interrupt control and status register	0x00
R32_PWM_REG_DATA8	0x40005010	PWM8/9 data register	0xXXXXXXXX
R32_PWM_REG_CYCLE	0x40005014	PWM cycle count end register	0x0000XXXX

PWMx Output Enable Register (R8_PWM_OUT_EN)

Bit	Name	Access	Description	Reset value
7	RB_PWM11_OUT_EN	RW	PWM11 output enable: 1: Enabled; 0: Disabled.	0
6	RB_PWM10_OUT_EN	RW	PWM10 output enable: 1: Enabled; 0: Disabled.	0
5	RB_PWM9_OUT_EN	RW	PWM9 output enable: 1: Enabled; 0: Disabled.	0

4	RB_PWM8_OUT_EN	RW	PWM8 output enable: 1: Enabled; 0: Disabled.	0
3	RB_PWM7_OUT_EN	RW	PWM7 output enable: 1: Enabled; 0: Disabled.	0
2	RB_PWM6_OUT_EN	RW	PWM6 output enable: 1: Enabled; 0: Disabled.	0
1	RB_PWM5_OUT_EN	RW	PWM5 output enable: 1: Enabled; 0: Disabled.	0
0	RB_PWM4_OUT_EN	RW	PWM4 output enable: 1: Enabled; 0: Disabled.	0

PWMx Output Polarity Configuration Register (R8_PWM_POLAR)

Bit	Name	Access	Description	Reset value
7	RB_PWM11_POLAR	RW	PWM11 output polarity control: 1: Default at high level, active low; 0: Default at low level, active high.	0
6	RB_PWM10_POLAR	RW	PWM10 output polarity control: 1: Default at high level, active low; 0: Default at low level, active high.	0
5	RB_PWM9_POLAR	RW	PWM9 output polarity control: 1: Default at high level, active low; 0: Default at low level, active high.	0
4	RB_PWM8_POLAR	RW	PWM8 output polarity control: 1: Default at high level, active low; 0: Default at low level, active high.	0
3	RB_PWM7_POLAR	RW	PWM7 output polarity control: 1: Default at high level, active low; 0: Default at low level, active high.	0
2	RB_PWM6_POLAR	RW	PWM6 output polarity control: 1: Default at high level, active low; 0: Default at low level, active high.	0
1	RB_PWM5_POLAR	RW	PWM5 output polarity control: 1: Default at high level, active low; 0: Default at low level, active high.	0
0	RB_PWM4_POLAR	RW	PWM4 output polarity control: 1: Default at high level, active low; 0: Default at low level, active high.	0

PWMx Configuration Control Register (R8_PWM_CONFIG)

Bit	Name	Access	Description	Reset value
7	RB_PWM10_11_STAG_EN	RW	PWM10/11 interleaved output enable: 1: Interleaved output; 0: Independent output.	0
6	RB_PWM8_9_STAG_EN	RW	PWM8/9 interleaved output enable: 1: Interleaved output; 0: Independent output.	0
5	RB_PWM6_7_STAG_EN	RW	PWM6/7 interleaved output enable: 1: Interleaved output; 0: Independent output.	0
4	RB_PWM4_5_STAG_EN	RW	PWM6/7 interleaved output enable: 1: Interleaved output; 0: Independent output.	0
[3:2]	RB_PWM_CYC_MOD	RW	PWM data width selection: 00: 8-bit data width; 01: 7-bit data width; 00: 6-bit data width; 11: 16-bit data width.	00b
1	RB_PWM_STAG_ST	RO	PWM interleave flag: 1: PWM5/7/9/11 is allowed to output; 0: PWM4/6/8/10 is allowed to output.	X
0	RB_PWM_CYCLE_SEL	RW	PWM period selection: 1: 8/7/6-bit data widths corresponding to 255/127/63 clock cycles; 16-bit data width corresponding to clock cycles controlled by R32_PWM_REG_CYCLE. 0: 8/7/6-bit data width corresponding to 256/128/64 clock cycles; The 16-bit data width corresponds to clock cycles controlled by R32_PWM_REG_CYCLE.	0

PWM Clock Divider Register (R8_PWM_CLOCK_DIV)

Bit	Name	Access	Description	Reset value
[7:0]	R8_PWM_CLOCK_DIV	RW	PWM reference clock frequency division factor. Fpwm=Fsys/R8_PWM_CLOCK_DIV.	00h

PWM Data Hold Register Group1 (R32_PWM4_7_DATA)

Bit	Name	Access	Description	Reset value
[31:24]	R8_PWM7_DATA	RW	PWM7 data hold register.	XXh
[23:16]	R8_PWM6_DATA	RW	PWM6 data hold register.	XXh
[15:8]	R8_PWM5_DATA	RW	PWM5 data hold register.	XXh
[7:0]	R8_PWM4_DATA	RW	PWM4 data hold register.	XXh

[31:16]	R16_PWM5_DATA	RW	PWM5 data hold register (16-bit width).	XXh
[15:0]	R16_PWM4_DATA	RW	PWM4 data hold register (16-bit width).	XXh

PWM Data Hold Register Group2 (R32_PWM8_11_DATA)

Bit	Name	Access	Description	Reset value
[31:24]	R8_PWM11_DATA	RW	PWM11 data hold register.	XXh
[23:16]	R8_PWM10_DATA	RW	PWM10 data hold register.	XXh
[15:8]	R8_PWM9_DATA	RW	PWM9 data hold register.	XXh
[7:0]	R8_PWM8_DATA	RW	PWM8 data hold register.	XXh
[31:16]	R16_PWM7_DATA	RW	PWM7 data hold register (16-bit width).	XXh
[15:0]	R16_PWM6_DATA	RW	PWM6 data hold register (16-bit width).	XXh

PWM Interrupt Control and Status Register (R8_PWM_INT_CTRL)

Bit	Name	Access	Description	Reset value
7	RB_PWM_IF_CYC	RW1Z	PWM cycle end flag. Write 1 to reset: 1: End; 0: Not end.	0
[6:2]	Reserved	RO	Reserved	00000b
1	RB_PWM_CYC_PRE	RW	Select the interrupt time point at the end of PWM cycle: 1: Interrupt is generated 16 counts in advance (Take 8-bit data width as an example, interrupt is generated when the count reaches 240); 0: Interrupt is generated 2 counts in advance (Take 8-bit data width as an example, interrupt is generated when the count reaches 254).	0
0	RB_PWM_IE_CYC	RW	PWM cycle end interrupt enable: 1: Enabled; 0: Disabled.	0

PWM8/9 Data Register (R32_PWM_REG_DATA8)

Bit	Name	Access	Description	Reset value
[31:16]	R16_PWM9_REG_DATA	RW	16-bit bit data of PWM9 channel.	XXXXh
[15:0]	R16_PWM8_REG_DATA	RW	16-bit bit data of PWM8 channel.	XXXXh

PWM Cycle Count End Register (R32_PWM_REG_CYCLE)

Bit	Name	Access	Description	Reset value
[31:16]	Reserved	RO	Reserved	0000h
[15:0]	RB_PWM_CYC_VALUE	RW	PWM clock period at 16 data width: Ncyc=RB_PWM_CYC_VALUE+1	XXXXh

11.3 PWM Configuration

(1) Set the R8_PWM_CLOCK_DIV register, to configure the reference clock frequency of PWM;

(2) Set the PWM output polarity configuration register (R8_PWM_POLAR), to configure the output polarity of the corresponding PWMx;
(3) Set the PWM configuration control register (R8_PWM_CONFIG), to set the PWM mode, data width and cycle;
(4) Set PWM output enable register (R8_PWM_OUT_EN), to enable the corresponding PWMx output;
(5) Calculate the data according to the required duty cycle and write it into the corresponding data hold register (R8_PWMx_DATA);
(6) Set the required PWM pin direction of PWM4-PWM11 as output, optional, set the drive capability of corresponding I/O;
(7) Update the data in R8_PWMx_DATA as needed, to update the output duty cycle.

Number of clock cycles (Ncyc) calculation formula:
Data width n=8/7/6: Ncyc=2^n-RB_PWM_CYCLE_SEL;
16-bit data width Ncyc=RB_PWM_CYC_VALUE+1
PWMx duty cycle calculation formula:
Duty cycle=R8_PWMx_DATA/Ncyc
PWMx output frequency Fpwmout Calculation formula:
PWMx output frequency Fpwmout=Fpwm/Ncyc=Fsys/R8_PWM_CLOCK_DIV/Ncyc

Note: If a DC signal needs to be generated by PWM, then the PWMx output can be filtered using a circuit such as R/C. It is recommended to use a two-stage RC with a time constant much greater than 4/Fpwmout, or a one-stage RC with a time constant much greater than 100/Fpwmout.

Chapter 12 Inter Integrated Circuit (I2C) Interface

12.1 Introduction to I2C

I2C (inter-integrated circuit) bus interface is a medium-low-speed serial bus. Multiple masters and slaves can be connected on the bus. Usually, I2C interface consists of 2 pins: serial clock pin (SCL) and serial data pin (SDA).

12.1.1 Main Features

CH585 and CH584 chip provide an I2C interface with the following characteristics:

- Master mode and Slave mode, support multi-master and multi-slave.
- 2 speeds: 100KHz and 400KHz, compatible with I2C Bus Specification.
- 7-bit and 10-bit addressing.
- The slave device supports dual 7-bit addresses.
- Broadcast bus.
- Bus arbitration, error detection, PEC verification, clock extension.
- SMBus compatibility.

12.2 I2C Overview

I2C is a half-duplex bus and can operate in one of the 4 following modes: master transmitter, master receiver, slave transmitter and slave receiver. By default, I2C operates in slave mode. After I2C generates a ATART condition, it automatically switches from slave to master. After an arbitration is lost or a Stop signal generates, it switches to slave. I2C supports multi-master mode. When it operates in master mode, I2C transmits data and addresses actively. Data and addresses are transferred as 8-bit bytes, high bits first, low bits last. After a Start event, it is 1-byte (in 7-bit mode) or 2-byte (in 10-bit mode). Every time the master transmits 8-bit data or address, the slave needs to respond one ACK, that is, pull down SDA bus, as shown in Figure 12-1.

Figure 12-1 I2C timing diagram

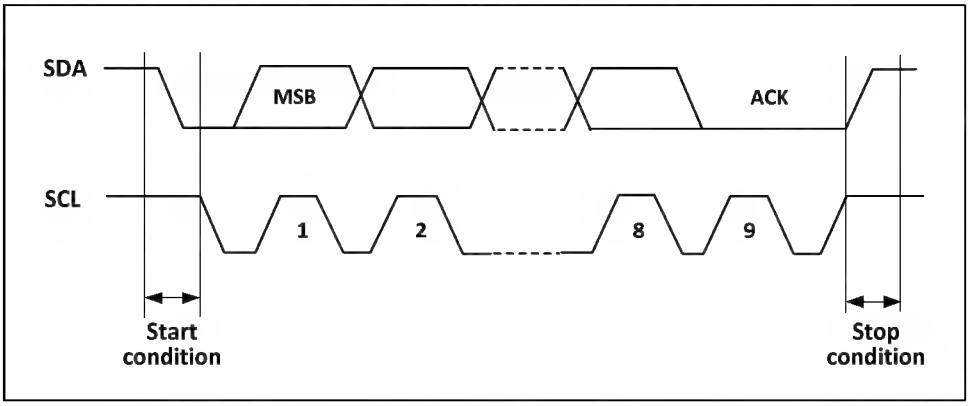

12.3 Master Mode

In master mode, I2C dominates a data transmission and generates the clock signal. A data transmission always begins with a Start condition, and ends with a Stop condition. The following is the step sequence in master mode:

1) Set the correct timings in the control register2 (R16_I2C_CTRL2) and clock control register (R16_I2C_CKCFGR);

2) Set suitable rise time in rise time register (R16_I2C_RTR);
3) Set the PE bit to enable peripheral in the control register (R16_I2C_CTRL1);
4) Set the START bit in the control register (R16_I2C_CTRL1), to generate a Start condition.
   After the START bit is set, I2C automatically switch to master mode, MSL bit is set, a Start condition 产 is generated. After a Start condition is generated, SB bit will be set. If ITEVTEN bit (in R16_I2C_CTRL2) is set, an interrupt will be generated. At this time, it is required to read the status register1 (R16_I2C_STAR1), write slave address to the data register, SB bit will be automatically cleared;
5) If in 10-bit addressing mode, write the data register to send the header sequence (header sequence is 11110xx0b, where xx denotes the highest 2 bits of 10-bit address).

   After the header sequence is sent, the ADD10 bit of the status register will be set. If ITEVTEN bit is set, an interrupt will be generated. At this time, it is required to read R16_I2C_STAR1 register, then write the second address byte to the data register, to clear ADD10 bit.

   Then, write the data register to send the second address byte. After the second address byte is sent, ADDR bit of the status register will be set. If ITEVTEN bit is set, an interrupt will be generated. At this time, it is required to read R16_I2C_STAR1 register and then read R16_I2C_STAR2 register to clear ADDR bit;

   If in 7-bit addressing mode, write data register to send address byte. After the address byte is sent, ADDR bit of the status register will be set. If ITEVTEN bit is set, an interrupt will be generated. At this time, it is required to read R16_I2C_STAR1 register and then read R16_I2C_STAR2 register to clear ADDR bit; In 7-bit addressing mode, the first sent byte is the address byte. The first 7 bits represent target slave device address, and the 8th bit determines the direction of the following message. 0 means that the master writes data to the slave, and 1 means that the master reads data from the slave.

   In 10-bit addressing mode, as shown in Figure 12-3, when transmitting address, the first byte is 11110xx0, where xx denotes the highest 2 bits of the 10-bit address. The second byte is the lower 8 bits of the 10-bit address. If going into master transmitter mode later, continue to transmit data. If going into master receiver mode later, it is required to send a repeated Start condition, followed by the header (11110xx1), then enter master receiver mode.

Figure 12-3 Master transceiver data in 10-bit mode

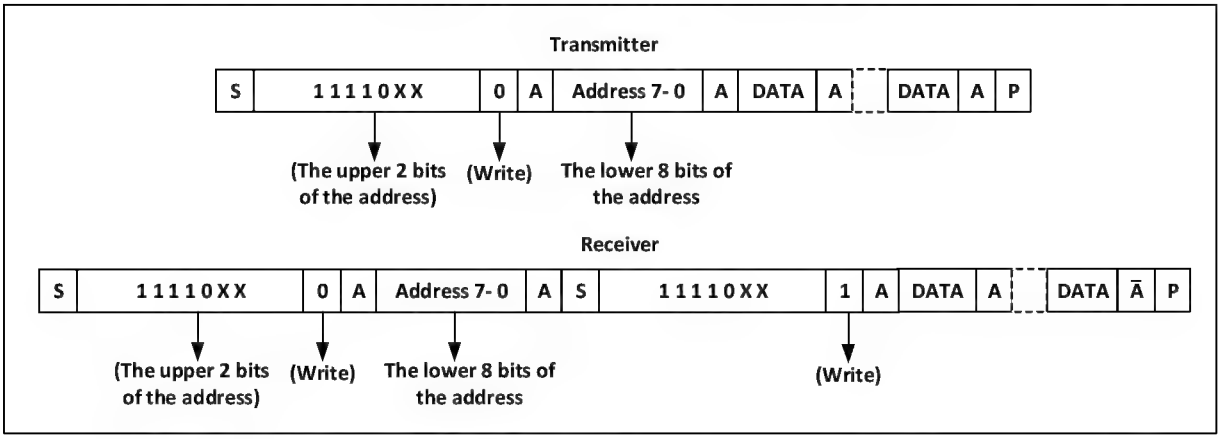

6) For transmitter, the internal shift register of the master transmits data from the data register to SDA. When the master receives ACK, the TxE bit of the status register1 (R16_I2C_STAR1) is set. If ITEVTEN bit and ITBUFEN bit are set, an interrupt will be generated. Write data to the data register to clear TxE bit.

If TxE bit is set and no data is written to the data register before last data transmission, BTF bit will be set. SCL is kept at low level before it is cleared. Read R16_I2C_STAR1, and then write data into the data register, to clear BTF bit.

For receiver, I2C receives data from SDA, and writes data to the data register via the shift register. After each byte, if ACK bit is set, I2C will send a response low level, and RxNE bit will be set. If ITEVTEN bit and ITBUFEN bit are set, an interrupt will be generated. If RxNE is set and no original data is read out before new data reception, BTF bit will be set. Before BTF is cleared, SCL will be kept at low level. Read R16_I2C_STAR1, then read the data register, to clear BTF bit.

7) The master automatically sends a Stop condition when it ends sending data, that is, STOP bit is set. For receiver, the master is required to set NAK at the response bit of the last data bit. Note, after NAK is generated, I2C will automatically switch to slave mode.

12.4 Slave Mode

In slave mode, I2C can recognize its address and general call address. The recognition of general call address can be enabled or disabled by software. Once a Start condition is detected, I2C will compare the data of SDA with its own address via the shift register (Bit number is determined by ENDUAL and ADDMODE) or general address (ENGC bit is set). If not matched, the interface ignores it and waits for another Start condition. If the header is matched, the ACK signal generates and waits for the address of the second byte. If the address of the second byte is matched or the full address is matched in 7-bit addressing mode, the ACK is generated firstly; the ADDR bit is set, if ITEVTEN bit has been set, the corresponding interrupt will be generated. If in dual-address mode (ENDUAL bit is set), it is required to read DUALF bit to judge which address is woken up by the master.

For slave mode, it is receiver mode by default. When the last bit of the received header is 1, or when the last bit of the 7-bit address is 1 (The first received is the header or normal 7-bit address), I2C will go into transmitter mode, TRA bit indicates that it is in receiver mode or in transmitter mode.

In transmitter mode, after ADDR bit is cleared, I2C transmits byte from the data register to SDA via the shift register. After the ACK is received, TxE bit will be set. If ITEVTEN bit and ITBUFEN bit are set, an interrupt will be generated. If TxE is set but no new data is written to the data register before the end of next data transmission, BTF bit will be set. Before BTF is cleared, SCL will be kept at low level. Read the status register1 (R16_I2C_STAR1), then write data to the data register, to clear BTF bit.

In receiver mode, after ADDR is cleared, I2C stores data in SDA to the data register via the shift register. Every time a byte is received, I2C will set ACK bit, and set RxNE bit. If ITEVTEN and ITBUFEN are set, an interrupt will be generated. If RxNE is set, and no previous data is read out before reception of new data, BTF bit will be set. Before BTF bit is cleared, SCL will be kept at low level. Read the status register1 (R16_I2C_STAR1), and read the data in the data register, to clear BTF bit.

When I2C detects a Stop condition, STOPF bit will be set. If ITEVFEN bit is set, an interrupt will be generated. Read the status register (R16_I2C_STAR1), then write to the control register (such as reset control word SWRST) to clear.

12.5 Error Conditions

12.5.1 Bus Error (BERR)

The bus error occurs when I2C interface detects an external Stop or Start condition during an address or a data transfer. When a bus error occurs, the BERR bit is set. And an interrupt is generated if the ITERREN is set. In slave mode, data are discarded, and the lines are released by hardware. If it is a Start condition, the slave considers it is a restart, and waits for an address or a Stop condition. If it is a Stop condition, the slave behaves like for a Stop condition. In master mode, lines are not released by hardware and the state of the current transmission is not affected. The user codes determine to abort or not the current transmission.

12.5.2 Acknowledge Failure (AF)

When I2C interface detects a non-acknowledge bit, the acknowledge failure occurs. When it occurs, the AF bit is set, and an interrupt is generated if the ITERREN bit is set. When AF occurs, if I2C interface works in slave mode, the lines must be released by hardware; if in master mode, a Stop condition must be generated by software.

12.5.3 Arbitration Lost (ARLO)

When I2C interface detects an arbitration lost condition, it occurs. When an arbitration lost occurs, the ARLO bit is set, and an interrupt is generated if the ITERREN bit is set. I2C switches to slave mode, and does not acknowledge its slave address in the same transfer, unless the master initiates a new Start condition. Lines are released by hardware.

12.5.4 Overload/Underload Error (OVR)

1) Overrun error:

In slave mode, when clock stretching is disabled and I2C interface is receiving data, if a byte is received and the last received data has not been read, it occurs. When it occurs, the last received byte is lost, and the transmitter should re-transmit the last received byte.

2) Underrun error:

In slave mode, when clock stretching is disabled and I2C interface is transmitting data, if no new data is written to the data register before the next byte, it occurs. When it occurs, the data in the last data register will be sent again. If it occurs, the receiver should discard the repeated received data. In order to not generate underrun error, I2C interface should write the data to the data register before the first rising edge of the next byte.

12.6 Clock Stretching

If clock stretching is disabled, overrun/underrun error may occur. However, if clock stretching is enabled:

1) In transmitter mode, if the TxE bit is set and the BTF bit is set, SCL is kept at low level and waits for user to read the status register, and write the data to be sent into the data register;
2) In receiver mode, if the RxNE bit is set and the BTF bit is set, SCL is kept at low level after data is received, until user reads the status register and read the data register;

So, enabling clock stretching helps avoid overrun/underrun error.

12.7 SMBus

The System Management Bus (SMBus) is a 2-wire interface, which is usually used between system and power management. SMBus has multiple similarities with I2C, for example, SMBus uses the same 7-bit addressing mode as I2C. The following is similarities between SMBus and I2C:

1) Master-slave communication, Master provides clock, multi-master multi-slave is supported;

2) 2-wire communication protocol;
3) 7-bit addressing format.

Differences:

1) The speed of I2C can be up to 400KHz. The speed of SMBus can only be up to 100KHz, and the minimum speed of SMBus is 10KHz;
2) SMBus: 35 mS clock low timeout. I2C: no timeout;
3) SMBus has fixed logic levels. While I2C does not have fixed logic levels, which are determined by VDD;
4) SMBus has bus protocols, while I2C does not have bus protocols.

SMBus also contains device identification, address resolution protocol, unique device identifier, SMBus alert and various bus protocols, please refer to SMBus specification version 2.0 for details. When SMBus is used, set the SMBus bit of the control register, and configure the SMBTYPE bit and the ENAARP bit as required.

12.8 Interrupt

I2C interface provides event interrupt and error interrupt. After going into the same interrupt service program, they are processed separately after query.

Figure 12-4 I2C interrupt requests

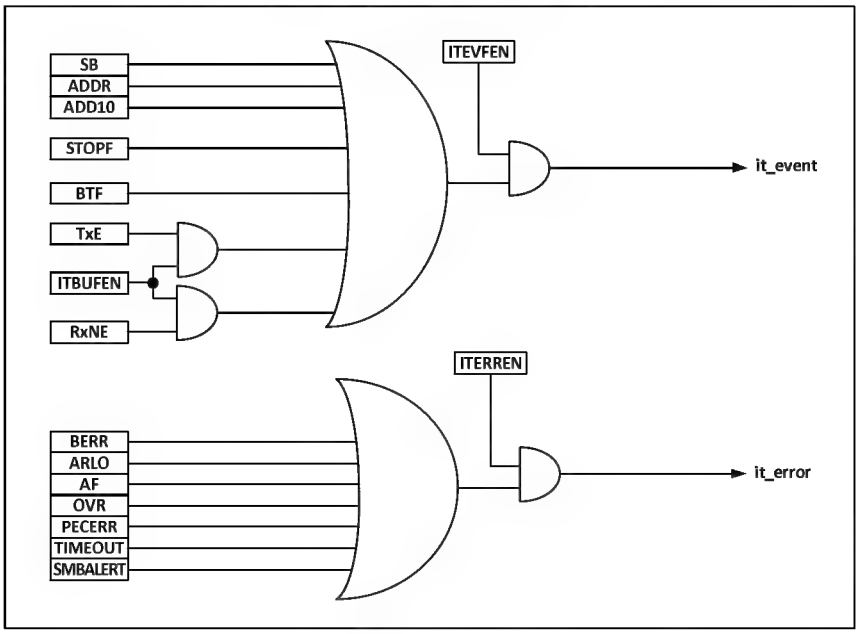

12.9 Packet Error Checking (PEC)

Packet Error Checking (PEC) is an additional CRC8 check step to provide transmission reliability and is calculated for each bit of serial data using the following polynomial: $C=X^8+X^2+X+1$.

PEC calculation is enabled by the ENPEC bit of the control register, and calculated on all message bytes, including addressed and Read/Write bits. In transmission, if PEC is enabled, the CRC8 calculation result of the last byte is added after the last byte data. In reception, the last byte is considered as the CRC8 calculation result. If it is not matched with the internal calculation result, a NAK is sent. In case of master receiver, a NAK follows the PEC whatever the check result.

12.10 Register Description

Table 12-1 I2C registers

Name	Access address	Description	Reset value
R16_I2C_CTRL1	0x40004800	I2C control register 1	0x0000
R16_I2C_CTRL2	0x40004804	I2C control register 2	0x0000
R16_I2C_OADDR1	0x40004808	I2C address register 1	0x0000
R16_I2C_OADDR2	0x4000480C	I2C address register 2	0x0000
R16_I2C_DATAR	0x40004810	I2C data register	0x0000
R16_I2C_STAR1	0x40004814	I2C status register 1	0x0000
R16_I2C_STAR2	0x40004818	I2C status register 2	0x0000
R16_I2C_CKCFGR	0x4000481C	I2C clock register	0x0000
R16_I2C_RTR	0x40004820	I2C rise time register	0x0002

I2C Control Register (R16_I2C_CTRL1)

Bit	Name	Access	Description	Reset value
15	RB_I2C_SWRST	RW	Software reset. When user codes set this bit, I2C is reset. Before reset, make sure that IIC lines are released and the bus is idle. *Note: This bit can reset I2C when no Stop condition is detected on the bus but the busy bit is 1.*	0
14	Reserved	RO	Reserved	0
13	RB_I2C_ALERT	RW	SMBus alert. This bit can be set or cleared by user codes. After the PE bit is set, this bit can be cleared by hardware. 1: Drive SMBusALERT pin low, response address header followed by ACK; 0: Release SMBusALERT pin high, response address header followed by NACK.	0
12	RB_I2C_PEC	RW	Data packet error checking enable, it is set to enable data packet error checking detection. This bit can be set or cleared by user codes. After PEC is transmitted, or when a Start or Stop condition is generated, or when the PE bit is cleared to 0, this bit is cleared by hardware. 1: PEC; 0: No PEC. *Note: PEC is corrupted when an arbitration is lost.*	0
11	RB_I2C_POS	RW	ACK/PEC position. This bit can be set or cleared by user codes. Or this bit can be cleared by hardware after PE is cleared. 1: The ACK bit controls ACK/NAK of the next byte that is received in the shift register. The next byte that is received in PEC shift register is a PEC;	0

			0: The ACK bit controls ACK/NAK of the current byte being received in the shift register. The PEC bits indicates that current byte in the shift register is a PEC. *Note: The POS bit is used for the reception of 2bytes data: it must be configured before reception. To NACK the second byte, the ACK bit must be cleared at once after the ADDR bit is cleared. To check the second byte as PEC, the PEC bit must be set after ADDR event occurs and the POS bit is configured.*	
10	RB_I2C_ACK	RW	Acknowledge enable. This bit can be set or cleared by user codes. Or this bit can be cleared by hardware after PE is set. 1: Acknowledge returned after a byte is received; 0: No acknowledge.	0
9	RB_I2C_STOP	RW	Stop condition generation. This bit can be set or cleared by user codes. Or this bit can be cleared by hardware when a Stop condition is detected. Or this bit can be set by hardware when a timeout error is detected. In master mode: 1: A Stop condition is generated during current byte transmission or after current Start condition is sent; 0: No Stop condition generated. In slave mode: 1: Release SCL and SDA after current byte transmission; 0: No Stop condition generated.	0
8	RB_I2C_START	RW	Start condition generation. This bit can be set or cleared by user codes. Or this bit can be cleared by hardware when a Start condition is sent or PE is cleared. In master mode: 1: Repeated Start condition generation; 0: No Start condition generation. In slave mode: 1: A Start condition is generated when the bus is idle; 0: No Start condition generated.	0
7	RB_I2C_NOSTRETCH	RW	Clock stretching disable. This bit can be used to disable clock stretching when ADDB or BTF flag is set, until it is cleared by software. 1: Disable clock stretching; 0: Enable clock stretching.	0
6	RB_I2C_ENGC	RW	General call enable. This can be set to enable general call. Response general address 00h.	0

5	RB_I2C_ENPEC	RW	PEC enable. This bit can be set to enable PEC calculation.	0
4	RB_I2C_ENARP	RW	ARP enable. This bit can be set to enable ARP. If SMBTYPE=0, use default SMBus device address; If SMBTYPE=1, use SMBus host address.	0
3	RB_I2C_SMBTYPE	RW	SMBus device type. 1: SMBus host; 0: SMBus device.	0
2	Reserved	RO	Reserved	0
1	RB_I2C_SMBUS	RW	SMBus mode selection: 1: SMBus mode; 0: I2C mode.	0
0	RB_I2C_PE	RW	I2C peripheral enable. 1: I2C enabled; 0: I2C disabled.	0

I2C Control Register2 (R16_I2C_CTRL2)

Bit	Name	Access	Description	Reset value
[15:11]	Reserved	RO	Reserved.	00000b
10	RB_I2C_ITBUFEN	RW	Buffer interrupt enable. 1: When TxE or RxEN is set, event interrupt is generated; 0: When TxE or RxEN is set, no interrupt is generated.	0
9	RB_I2C_ITEVTEN	RW	Event interrupt enable. This bit can be set to enable event interrupt. The interrupt is generated when: SB=1 (Master); ADDR=1 (Master/Slave); ADDR10=1 (Master); STOPF=1 (Slave); BTF=1, with no TxE or RxEN event; If ITBUFEN=1, TxE event to 1; If ITBUFEN=1, RxNE event to 1.	0
8	RB_I2C_ITERREN	RW	Error interrupt enable. This bit can be set to enable error interrupt. The interrupt is generated when: BERR=1; ARLO=1; AF=1; OVR=1; PECERR=1; TIMEOUT=1; SMBAlert=1.	0
[7:6]	Reserved	RO	Reserved.	0

[5:0]	RB_I2C_FREQ	RW	I2C clock frequency. The correct clock frequency must be input to generate correct timing. The allowed range is 2~36MHz. These bits must be set between 000010b and 100100b, and the unit is MHz. Recommended: Minimum 2MHz input clock in standard mode; minimum 4MHz input clock in fast mode.	000000b

I2C Address Register1 (R16_I2C_OADDR1)

Bit	Name	Access	Description	Reset value
15	RB_I2C_ADDMODE	RW	Addressing mode. 1: 10-bit slave address (7-bit address not acknowledged); 0: 7-bit slave address (10-bit address not acknowledged).	0
[14:10]	Reserved	RO	Reserved	00000b
[9:8]	RB_I2C_ADD9_8	RW	Bus address. Bits9-8 when using 10-bit address. Ignore when using 7-bit address.	00b
[7:1]	RB_I2C_ADD7_1	RW	Bus address, bits7-1.	0000000b
0	RB_I2C_ADD0	RW	Bus address. Bit0 when using 10-bit address. Ignore when using 7-bit address.	0

I2C Address Register2 (R16_I2C_OADDR1)

Bit	Name	Access	Description	Reset value
[15:8]	Reserved	RO	Reserved.	00h
[7:1]	RB_I2C_ADD2	RW	Bus address, bits7-1 in dual addressing mode.	00h
0	RB_I2C_ENDUAL	RW	Dual addressing mode enable bit. This bit can be set to make ADD2 recognized.	0

I2C Data Register (R16_I2C_DATAR)

Bit	Name	Access	Description	Reset value
[15:8]	Reserved	RO	Reserved.	00h
[7:0]	RB_I2C_DATAR	RW	Data register. It can be used to store the received data or store the data to be sent to the bus.	00h

I2C Status Register1 (R16_I2C_STAR1)

Bit	Name	Access	Description	Reset value

15	RB_I2C_SMBALERT	RW0	SMBus alert. This bit can be reset by user codes writing 0, or reset by hardware when PE is at low level. In SMBus host mode: 1: SMBus alert occurs; 0: No SMBus alert. In SMBus slave mode: 1: SMBAlert response address header to SMBAlert LOW received; 0: No SMBAlert response address header received.	0
14	RB_I2C_TIMEOUT	RW0	Timeout or Tlow error flag. This bit can be reset by user codes writing 0, or reset by hardware when PE is at low level. 1: SCL remained LOW for 25mS, or master low extend time more than 10mS, or slave low extend time more than 25mS; 0: No timeout error. *Note: When this bit is set in slave mode, the slave device will reset the communication and the hardware will release the bus; when this bit is set in master mode, the hardware will issue a stop condition.*	0
13	Reserved	RO	Reserved.	0
12	RB_I2C_PECERR	RW0	PEC error flag in reception. This bit can be reset by user codes writing 0, or reset by hardware when PE is at low level. 1: PEC error, NAK returned after PEC is received; 0: No PEC error.	0
11	RB_I2C_OVR	RW0	Overrun/Underrun flag. 1: Overrun/Underrun: If NOSTRETCH=1, when a new byte is received in reception and data register has not been read, the new received byte is lost. In transmission, when no new data is written into data register, the same byte is sent twice; 0: No overrun/underrun.	0
10	RB_I2C_AF	RW0	Acknowledge failure flag. This bit can be reset by user codes writing 0, or reset by hardware when PE is at low level. 1: Acknowledge failure; 0: No acknowledge failure.	0

9	RB_I2C_ARLO	RW0	Arbitration lost flag. This bit can be reset by user codes writing 0, or reset by hardware when PE is at low level. 1: Arbitration lost detected, the interface loses the control to the bus; 0: Arbitration is normal.	0
8	RB_I2C_BERR	RW0	Bus error flag. This bit can be reset by user codes writing 0, or reset by hardware when PE is at low level. 1: Start/Stop condition error; 0: Normal.	0
7	RB_I2C_TxE	RO	Data register empty flag. It can be cleared by writing data to the data register, or it can be cleared by hardware after a Start/Stop condition is generated or when PE is 0. 1: Data register empty in transmission; 0: Data register not empty.	0
6	RB_I2C_RxNE	RO	Data register not empty flag. It can be cleared by reading/writing data to the data register, or it can be cleared by hardware when PE is 0. 1: Data register not empty in reception; 0: Normal.	0
5	Reserved	RO	Reserved.	0
4	RB_I2C_STOPF	RO	Stop condition flag. It can be cleared by write operation to the control register1 after user reads the status register1, or it can be cleared by hardware when PE is 0. 1: Slave detects a Stop condition on the bus after an acknowledge; 0: No Stop condition detected.	0
3	RB_I2C_ADD10	RO	10-bit address header sent flag. It can be cleared by write operation to the control register1 after user reads the status register1, or it can be cleared by hardware when PE is 0. 1: In 10-bit addressing mode, slave has sent the first address byte; 0: None.	0

2	RB_I2C_BTF	RO	Byte transmission finished flag. It can be cleared by read/write operation to the data register after user reads the status register1. In transmission, it can be cleared by hardware after a Start/Stop condition is generated or when PE is 0. 1: Byte transmission finished. If NOSTRETCH=0: in transmission, when a new data is sent and no new data is written into the data register; in reception, when a new byte is received but the data register has not been read; 0: None.	0
1	RB_I2C_ADDR	RW0	Address sent/matched flag. It can be cleared by read operation to the status register2 after user reads the status register1, or it can be cleared by hardware when PE is 0. In master mode: 1: Address transmission finished: in 10-bit addressing mode, this bit is set after ACK of the second address byte is received; in 7-bit addressing mode, this bit is set after ACK of the byte is received; 0: Address transmission not finished. In slave mode: 1: Received address matched; 0: Address not matched or no address received.	0
0	RB_I2C_SB	RO	Start bit sent flag. It can be cleared by write operation to the data register after user reads the status register1, or it can be cleared by hardware when PE is 0. 1: Start bit sent; 0: Start bit not sent.	0

I2C Status Register2 (R16_I2C_STAR2)

Bit	Name	Access	Description	Reset value
[15:8]	RB_I2C_PEC	RO	Packet error checking register. When PEC is enabled (ENPEC is set), this register stores the value of PEC.	00h
7	RB_I2C_DUALF	RO	Dual flag. It can be cleared by hardware when a Stop/Start bit is generated or when PE=0. 1: Received address matched with OADDR2; 0: Received address matched with OADDR1.	0

6	RB_I2C_SMBHOST	RO	SMBus host header flag. It can be cleared by hardware when a Stop/Start bit is generated or when PE=0. 1: When SMBTYPE=1 and ENARP=1, SMBus host address received; 0: SMBus host address not received.	0
5	RB_I2C_SMBDEFAULT	RO	SMBus device default address flag. It can be cleared by hardware when a Stop/Start bit is generated or when PE=0. 1: When ENARP=1, SMBus device default address received; 0: SMBus device default address not received.	0
4	RB_I2C_GENCALL	RO	General call address flag. It can be cleared by hardware when a Stop/Start bit is generated or when PE=0. 1: When ENGC=1, general call address received; 0: General call address not received.	0
3	Reserved	RO	Reserved.	0
2	RB_I2C_TRA	RO	Transmission/reception flag. It can be cleared by hardware when a Stop condition is detected (STOPF=1) or repeated Start condition is detected or an arbitration lost is detected (ARLO=1) or when PE=0. 1: Data transmitted; 0: Data received. This bit is determined by the R/W bit of the address byte.	0
1	RB_I2C_BUSY	RO	Bus busy flag. It can be cleared when a Stop condition is detected. When the interface is disabled (PE=0), the information is still updated. 1: Busy bus: SDA or SCL LOW; 0: Idle bus, and no communication.	0
0	RB_I2C_MSL	RO	Master/slave mode indication. It can be cleared by hardware when the interface is in Master mod (SB=1). It can be cleared by hardware when the bus detects a Stop bit or an arbitration lost or when PE=0.	0

I2C Clock Register (R16_I2C_CKCFGR)

Bit	Name	Access	Description	Reset value

15	RB_I2C_F/S	RW	Master mode selection: 1: Fast mode; 0: Standard mode.	0
14	RB_I2C_DUTY	RW	Clock HIGH duty cycle in fast mode: 1: 36%; 0: 33.3%.	0
[13:12]	Reserved	RO	Reserved.	00b
[11:0]	RB_I2C_CCR	RW	Clock frequency division factor register, which decides frequency wave of SCL clock. In I2C standard mode or SMBus mode: T_{high} = CCR * T_{HCLK} T_{low} = CCR * T_{HCLK} In I2C fast mode: If DUTY = 0: T_{high} = CCR * T_{HCLK} T_{low} = 2 * CCR * T_{HCLK} If DUTY = 1: (Speed reaches 400kHz) T_{high} = 9 * CCR * T_{HCLK} T_{low} = 16 * CCR * T_{HCLK} Example: In the standard mode, the SCL frequency of 100kHz is generated: CCR = FREQR/(2*100KHz), when FREQR = 52MHz and THCLK = 1/52MHz, CCR = 52MHz/(2*100KHz) = 260, and CCR is written in 0x104.	000h

I2C Rise Time Register (R16_I2C_RTR)

Bit	Name	Access	Description	Reset value
[15:6]	Reserved	RO	Reserved.	000h
[5:0]	RB_I2C_TRISE	RW	Maximum rise time. These bits set the rise time of SCL in master mode. The maximum rise time=TRISE–single clock cycle. This bit can be set only when PE is cleared.	000010b

12.11 I2C Timing

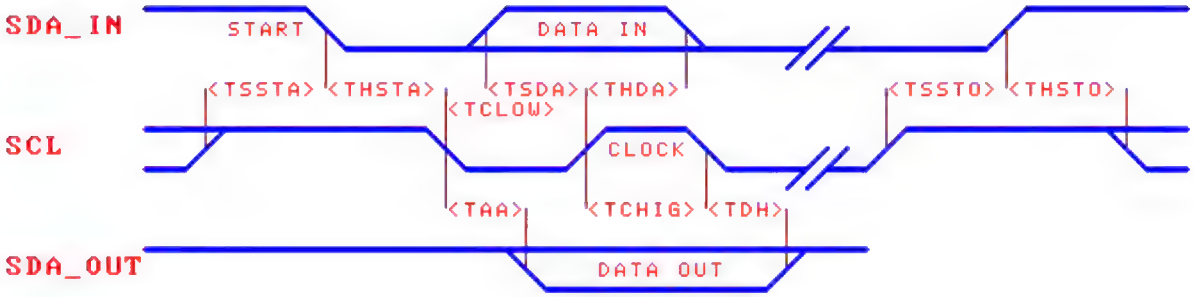

Name	Parameter description (TA=25°C，VIO33=3.3V)	Min.	Typ.	Max.	Unit
TSSTA	Setup time of SCL HIGH before SDA falling edge	0.4			uS
THSTA	Hold time of SCL HIGH after SDA falling edge	0.4			uS
TSDA	Setup time of SDA data before SCL rising edge	0.05			uS
THDA	Hold time of SDA data after SCL rising edge	>TCHIG			uS
TSSTO	Setup time of SCL HIGH before SDA rising edge	0.4			uS
THSTO	Hold time of SCL HIGH after SDA rising edge	0.8			uS
TCLOW	Time of SCL clock LOW	0.6			uS
TCHIG	Time of SCL clock HIGH	0.5			uS
TAA	SCL falling edge to SDA output valid	0.006		0.4	uS
TDH	SDA output hold time after SCL falling edge	0.006			uS
TR	SCL/SDA input rising edge time			0.2	uS

Chapter 13 Segment LCD

13.1 Introduction to LCD

CH585 and CH584 provide segment LCD controller interface, which can support 112 dots (28*4) LCD panel. It supports 3.3V and 2.5V drive voltage, adjustable scan frequency, 1/2duty, 1/3duty, 1/4duty and 1/3bias, 1/2bias specification LCD.

13.2 Register Description

Table 13-1 LCD registers

Name	Access address	Description	Reset value
R8_LCD_CMD	0x40006000	LCD command register	0x00
R32_LCD_RAM0	0x40006004	LCD RAM0 register	0x00000000
R32_LCD_RAM1	0x40006008	LCD RAM0 register	0x00000000
R32_LCD_RAM2	0x4000600C	LCD RAM0 register	0x00000000
R32_LCD_RAM3	0x40006010	LCD RAM3 register	0x00000000
R32_LCD_SEG_EN	0x40006014	LCD segment enable register	0x00000000

LCD Command Register (R8_LCD_CMD)

Bit	Name	Access	Description	Reset value
7	RB_VLCD_SEL	RW	LCD drive voltage selection: 1: 2.5V; 0: 3.3V.	0
[6:5]	RB_SCAN_CLK_SEL	RW	Scan clock selection: 00: 256Hz; 01: 512Hz; 10: 1KHz; 11: 128Hz.	0
[4:3]	RB_LCD_DUTY	RW	LCD duty cycle selection: 00: 1/2; 01: 1/3; 10: 1/4; 11: Invalid.	0
2	RB_LCD_BIAS	RW	Bias ratio selection: 1: 1/3; 0: 1/2.	0
1	RB_LCD_ON	RW	LCD switch: 1: Enable; 0: Disable.	0
0	RB_SYS_EN	RW	System enable: 1: Enable; 0: Disable.	0

LCD RAM0 Register (R32_LCD_RAM0)

Bit	Name	Access	Description	Reset value
[31:0]	RB_LCD_SEGX(X=0	RW	Data in SEG0-SEG7 segments, 4 bits per	0

	-7)		segment.	

LCD RAM1 Register (R32_LCD_RAM1)

Bit	Name	Access	Description	Reset value
[31:0]	RB_LCD_SEGX(X=8-15)	RW	Data in SEG8-SEG15 segments, 4 bits per segment.	0

LCD RAM2 Register (R32_LCD_RAM2)

Bit	Name	Access	Description	Reset value
[31:0]	RB_LCD_SEGX(X=16-23)	RW	Data in SEG16-SEG23 segments, 4 bits per segment.	0

LCD RAM3 Register (R32_LCD_RAM3)

Bit	Name	Access	Description	Reset value
[31:16]	Reserved	RO	Reserved	0
[31:0]	RB_LCD_SEGX(X=24-27)	RW	Data in SEG24-SEG27 segments, 4 bits per segment.	0

LCD Segment Enable Register (R32_LCD_SEG_EN)

Bit	Name	Access	Description	Reset value
[31:28]	Reserved	RO	Reserved	0
[27:0]	RB_LCD_SEG_EN	RW	SEG27-SEG0 segment enable, active high.	0

13.3 Segment LCD Configuration

(1) Select and turn on the 32KHz clock source;

(2) Set the LCD driver pin to be used as floating input, mandatory, set the bit corresponding to R32_PIN_CONFIG2. Note that the external reset RST multiplexes the LCD driver pin SEG2, and if SEG2 is to be used, the external reset function should be cancelled;

(3) Load the segment data to be displayed into the LCD data register R32_LCD_RAM0/1/2/3;

(4) Configure R8_LCD_CMD to set parameters such as drive voltage, scan frequency, bias, duty, etc., and set LCD_ON and RB_LCD_SEG_EN in register R32_LCD_SEG_EN to turn on the segment LCD driver;

(5) You can update the data in the LCD data register at any time to change the display content.

Chapter 14 Independent Watchdog (IWDG)

14.1 Introduction to IWDG

Independent watchdog (IWDG) is driven by a dedicated internal low-speed clock (LSI).

14.2 Register Description

Table 14-1 IWDG registers

Name	Access address	Description	Reset value
R32_IWDG_KR	0x40001000	IWDG key register	0xXXXXXXXX
R32_IWDG_CFG	0x40001004	IWDG configuration register	0x4FFFXFFF

IWDG Key Register (R32_IWDG_KR)

Bit	Name	Access	Description	Reset value
[31:16]	Reserved	WO	Reserved	XXXXh
[15:0]	IWDG_KR	WO	KEY[15:0]: key value (Write register only, read out value is 0x0000) The software must write 0xAAAA at certain intervals to reload the count value, otherwise, when the counter is 0, the watchdog will generate a reset, and writing 0x5555 indicates that the protection is lifted. Write 0xCCCC to start the watchdog work (If the hardware watchdog is selected, it is not restricted by this command word)	XXXXh

IWDG Configuration Register (R32_IWDG_CFG)

Bit	Name	Access	Description	Reset value
31	IWDG_EN	RO	Watchdog start flag bit: 1: On; 0: Off.	0
30	WR_PROTECT	RO	Write protection flag bit: 1: Turn on protection, when turned on the operation of the protected field does not take effect; 0: Unprotected.	1
29	STOP_EN	RW	Watchdog stop enable (protected) 1: Turn on the stop switch; 0: Turn off the stop switch. *Note: Valid only in debug mode.*	0
28	Reserved	RO	Reserved	0
[27:16]	COUNT	RO	Watchdog decrement counter	FFFh
15	PVU	RO	Watchdog configuration register update flag bit (protected):	X

			1: Register has update; 0: Register has no update.	
[14:12]	PR	RW	Prescaling factor (protected) 000: Divided by 4; 001: Divided by 8; 010: Divided by 16; 011: Divided by 32; 100: Divided by 64; 101: Divided by 128; 110: Divided by 256; 111: Divided by 512.	000b
[11:0]	RLR	RW	RL[11:0]: Watchdog counter reload (protected) Used to define the reload value for the watchdog counter, which is transferred to the counter whenever 0xAAAA is written to the IWDG_KR register. The counter then counts down from this value. The watchdog timeout period can be calculated from this reload value and the clock prescaler value.	FFFh

Note: Bits labeled as protected are not valid for read/write operations when the WR_PROTECT flag bit in the R32_IWDG_CFG register is 1. You must first write 0x5555 to the IWDG_KR register, at which time the WR_PROTECT bit in the R32_IWDG_CFG register is 0, before a read/write operation can be performed on these bits.

Chapter 15 Analog-to-digital Converter (ADC)

15.1 Introduction to ADC

CH585 and CH584 provide a 12-bit successive approximation analog to digital converter (ADC) and up to 17 channels, supports channel scanning function, support 14 external signal sources and 3 internal signal sources.

15.1.1 Main Features

- 12-bit resolution.
- 14 external voltage sampling channels, internal temperature detection channels and internal battery voltage detection channels.
- Single-ended input mode and differential input mode detection.
- Optional sampling clock frequency.
- ADC input voltage range: 0V~VIO33.
- Optional PGA: provide gain adjustment options.
- Optional input buffer BUF: support high resistance signal source.
- Support DMA and automatic continuous ADC sampling in timing interval, with adjustable interval
- Support the channel scanning function, which allows you to configure the order of scanning, the number of channels to be scanned, and provides an end-of-scan interrupt.

15.1.2 Functional Description

The figure below is the block diagram of an ADC module.

Figure 15-1 Architecture diagram of ADC

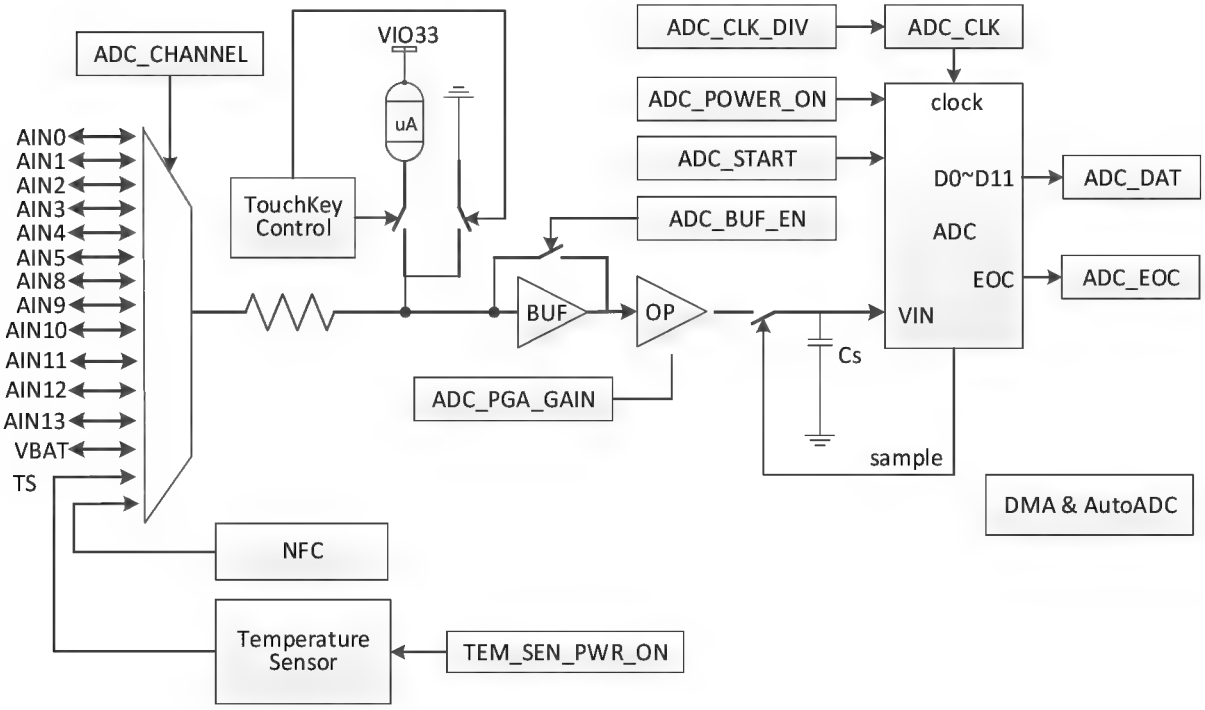

15.2 Register Description

Table 15-1 ADC registers

Name	Access address	Description	Reset value
R8_ADC_CHANNEL	0x40001058	ADC input channel select register	0x10
R8_ADC_CFG	0x40001059	ADC configuration register	0xA0
R8_ADC_CONVERT	0x4000105A	ADC conversion control register	0x00
R8_TEM_SENSOR	0x4000105B	Temperature sensor control register	0x00
R16_ADC_DATA	0x4000105C	ADC data register	0x0XXX
R8_ADC_INT_FLAG	0x4000105E	ADC interrupt flag register	0x00
R8_ADC_CTRL_DMA	0x40001061	DMA control and status register	0x00
R8_ADC_DMA_IF	0x40001062	DMA and interrupt control register	0x00
R8_ADC_AUTO_CYCLE	0x40001063	ADC and DMA interrupt flag register	0xXX
R32_ADC_DMA_NOW	0x40001064	Continuous ADC timing cycle register	0x000XXXXX
R32_ADC_DMA_BEG	0x40001068	Current buffer address of DMA register	0x000XXXXX
R32_ADC_DMA_END	0x4000106C	Start buffer address of DMA	0x000XXXXX
R32_ADC_SCAN_CFG1	0x40001070	End buffer address of DMA	0xFFFFFFFF
R32_ADC_SCAN_CFG2	0x40001074	Scan configuration register 1	0x000FFFFF

ADC Input Channel Select Register (R8_ADC_CHANNEL)

Bit	Name	Access	Description	Reset value
[7:4]	Reserved	RO	Reserved	0
[3:0]	RB_ADC_CH_INX	RW	ADC channel index number, a total of 14 channels: 00h-0Dh: External signal channels A0~A13; 0Eh: Battery voltage VBAT; 0Fh: Built-in temperature sensor TS. 10h: NFC energy detection channel.	10000b

ADC Configuration Register (R8_ADC_CFG)

Bit	Name	Access	Description	Reset value
[7:6]	RB_ADC_CLK_DIV	RW	ADC clock frequency selection: When R16_CLK_SYS_CFG[9] = 1, 00: Reserved; 01: CK32M divided by 4, 8MHz; 10: CK32M divided by 6, 5.33MHz; 11: CK32M divided by 8, 4MHz. When R16_CLK_SYS_CFG[9] = 0, 00: CK16M divided by 2, 8MHz; 01: CK16M divided by 4, 4MHz; 10: CK16M divided by 6, 2.67MHz; 11: CK16M divided by 8, 2MHz. *Note: ADC clock frequency supports up to 8MHz.*	10
[5:4]	RB_ADC_PGA_GAIN	RW	ADC input PGA gain selection: Used in conjunction with bit RB_ADC_PGA_GAIN[2] in register	10b

			R8_ADC_CONVERT. When RB_ADC_PGA_GAIN[2]=0 00: -12dB, 1/4; 01: -6dB, 1/2; 10: 0dB, 1 time, no gain; 11: 6dB, 2 times. When RB_ADC_PGA_GAIN[2]=1 00: 6dB, 2 times; 01: 12dB, 4 times; 10: 18dB, 8 times; 11: 24dB, 16 times.	
3	RB_ADC_OFS_TEST	RW	ADC offset error test mode: 1: Test/calibrate mode. The lower 12-bit data of data register R16_ADC_DATA will be inverted bit by bit in test mode (0x0573 is inverted to 0x0A8C); 0: Normal mode.	0
2	RB_ADC_DIFF_EN	RW	ADC channel signal input mode: 1: Differential input; 0: Single-ended input.	0
1	RB_ADC_BUF_EN	RW	ADC input buffer BUF enable: 1: Enable; 0: Disable.	0
0	RB_ADC_POWER_ON	RW	ADC module power enable: 1: Enable; 0: Disable.	0

The PGA gain calculation formula explains: ΔV * A + Vref = 2 * Vref * ADC / 4096.

ΔV: Voltage input to the ADC module.

In single-ended mode ΔV = (VIN - Vref), where VIN is the voltage under test.

In differential mode ΔV = (VINp - VINn), where VINp and VINn are the two voltages of the differential input.

The ADC module input voltage parameter is V * A, which needs to satisfy: - Vref ≤ V * A ≤ + Vref.

A: Gain factor, refer to Table 15-2 and Table 15-3 "PGA Gain Selection".

ADC: The digital quantity after ADC conversion, i.e. R16_ADC_DATA.

Vref: The actual voltage value of the power node VINTA of the internal analog circuit is usually 1.05V±0.015V.

Table 15-2 Table of PGA gain selection and input voltage range (Single-ended input mode)

PGA gain selection	The sampled voltage, Vi, calculated from the data converted by ADC	Upper limit of theoretically measurable voltage	Measured voltage range (assuming Vref = 1.05V)	Highly accurate measurement voltage range
-12dB(1/4)	(ADC/512-3)*Vref	5*Vref	-0.2V~VIO33+0.2V	2.9V~VIO33
-6dB(1/2)	(ADC/1024-1)*Vref	3*Vref	-0.2V~3.15V	1.9V~3V
0dB(1)	(ADC/2048)*Vref	2*Vref	0V~2.1V	0V~2V
6dB(2)	(ADC/4096+0.5)*Vref	1.5*Vref	0.525V~1.575V	0.6V~1.5V
12dB(4)	(ADC/8192+0.75)*Vref	1.25*Vref	0.788V~1.31V	0.8V~1.28V
18dB(8)	(ADC/16384+0.875)*Vref	1.125*Vref	0.919V~1.18V	0.93V~1.15V

24dB(16)	(ADC/32768+0.9375)*Vref	1.0625*Vref	0.984V~1.1156V	0.99V~1.11V

Table 15-3 PGA gain selection and input voltage range table (differential input mode (VINn=0V, VINp≥0V for example))

PGA gain selection	VINn	The sampled voltage, VINp, calculated from the data converted by ADC	Upper limit of theoretically measurable voltage	Measured voltage range (assuming Vref = 1.05V)	Highly accurate measurement voltage range
-12dB(1/4)	0V	(ADC/512-4)*Vref	4*Vref	0V~VIO33+0.2V	0V~VIO33
-6dB(1/2)	0V	(ADC/1024-2)*Vref	2*Vref	0V~2.1V	0V~2V
0dB(1)	0V	(ADC/2048-1)*Vref	1*Vref	0V~1.05V	0V~1V
6dB(2)	0V	(ADC/4096-0.5)*Vref	0.5*Vref	0V~0.525V	0V~0.5V
12dB(4)	0V	(ADC/8192-0.25)*Vref	0.25*Vref	0V~0.26V	0V~0.23V
18dB(8)	0V	(ADC/16384-0.125)*Vref	0.125*Vref	0V~0.13V	0V~0.1V
24dB(16)	0V	(ADC/32768-0.0625)*Vref	0.0625*Vref	0V~0.0656V	0V~0.06V

High gain mode is recommended in the application of differential mode, easy to adjust the bias voltage, such as: Table 15-3 above, you can choose VINn connected to GND, VINp connected to the measured signal.

Note: If a low voltage is sampled after a negative gain (signal reduction), a large error may be caused in a voltage range. If a high voltage is sampled after a positive gain (signal amplification), ADC conversion value may overflow, so it is recommended to select a reasonable gain mode according to the voltage range of the measured signal.

It is recommended to enable the input buffer by default. Only when the internal resistance of the external signal source is less than 1KΩ, the input buffer can be turned off for ADC.

When using differential input, it is recommended to turn off the input buffer. When used for TouchKey detection, the input buffer must be enabled, and it is recommended to select gain of 0dB.

ADC Conversion Control Register (R8_ADC_CONVERT)

Bit	Name	Access	Description	Reset value
7	RB_ADC_EOC_X	RO	ADC conversion end flag (UART signal): 1: Completed 0: 进行中。	0
6	Reserved	RO	Reserved	0
[5:4]	RB_ADC_SAMPLE_TIME	RW	ADC sample period selection: 00: 4*Tadc; 01: 5*Tadc; 10: 6*Tadc; 11: 7*Tadc.	0
[3:2]	Reserved	RO	Reserved	0
1	RB_ADC_PGA_GAIN[2]	RW	ADC's input PGA gain direction selection, combined with RB_ADC_PGA_GAIN[1:0] is used. *Note: This bit must be 0 when using TS, i.e. RB_ADC_PGA_GAIN[2:0]=011b when*	0

			using TS.	
0	RB_ADC_START	RW	ADC conversion enable control and status. It is cleared automatically when non-continuous ADC ends or when DMA ends: 1: Start conversion/being converted; 0: Stop conversion.	0

Temperature Sensor Control Register (R8_TEM_SENSOR)

Bit	Name	Access	Description	Reset value
7	RB_TEM_SEN_PWR_ON	RW	TS temperature sensor power enable control: 1: Enabled; 0: Disable.	0
[6:0]	Reserved	RW	Reserved	0

ADC Data Register (R16_ADC_DATA)

Bit	Name	Access	Description	Reset value
[15:12]	Reserved	RW	Reserved.	0000b
[11:0]	RB_ADC_DATA	RO	Data after ADC conversion.	XXXh

ADC Interrupt Flag Register (R8_ADC_INT_FLAG)

Bit	Name	Access	Description	Reset value
7	RB_ADC_IF_EOC	RO	ADC conversion finished flag. This flag can be cleared by writing to register R8_ADC_CONVERT or R8_TKEY_CONVERT.	0
[6:0]	Reserved	RW	Reserved	0000000

DMA and Interrupt Control Register (R8_ADC_CTRL_DMA)

Bit	Name	Access	Description	Reset value
7	RB_ADC_AUTO_EN	RW	Automatic continuous ADC sampling enable at timing interval: 1: Enable automatic ADC; 0: Disable automatic ADC.	0
6	RB_ADC_CONT_EN	RW	ADC continuous conversion mode enable: 1: Enable continuous ADC; 0: Disable continuous ADC.	0
5	RB_SCAN_AUTO_TYPE	RW	In ADC SCAN mode: 1: Continuous trigger; 0: Periodic trigger.	0
4	RB_ADC_IE_EOC	RW	ADC conversion completion interrupt enable: 1: Enable interrupt; 0: Disable interrupt.	0
3	RB_ADC_IE_DMA_END	RW	DMA end interrupt enable: 1: Enable interrupt;	0

			0: Disable interrupt.	
2	RB_ADC_DMA_LOOP	RW	DMA address loop enable: 1: Enable address loop; 0: Disable address loop. If the DMA address loop is enabled, when the DMA address is added to the set end address, it will automatically loop to the start address that is set.	0
1	Reserved	RO	Reserved	0
0	RB_ADC_DMA_ENABLE	RW	DMA function enable: 1: Enable DMA; 0: Disable DMA.	0

ADC and DMA Interrupt Flag Register (R8_ADC_DMA_IF)

Bit	Name	Access	Description	Reset value
[7:5]	Reserved	RO	Reserved	000
4	RB_ADC_IF_END_ADC	RW1Z	ADC conversion completion interrupt flag, write 1 to clear or when data is taken by DMA or write to register R8_ADC_CONVERT to clear this flag: 1: ADC has been completed once; 0: Not completed.	0
3	RB_ADC_IF_DMA_END	RW1Z	DMA completion flag. Write 1 to reset: 1: DMA has been completed; 0: Not completed.	0
[2:0]	Reserved	RO	Reserved	000

Continuous ADC Timing Cycle Register (R8_ADC_AUTO_CYCLE)

Bit	Name	Access	Description	Reset value
[7:0]	R8_ADC_AUTO_CYCLE	RW	The starting value of continuous ADC timing cycle is counted in unit of 16 system clocks and reloaded after reaching 256. Calculation: timing =(256-R8_ADC_AUTO_CYCLE)*16*Tsys Counts in units of 32MHz clock at the start value of continuous TKEY timing cycles. Calculation method: Timing = R8_ADC_AUTO_CYCLE*T_{CK32M} (Or T_{CK16M}).	XXh

DMA Current Buffer Address (R16_ADC_DMA_NOW)

Bit	Name	Access	Description	Reset value
[31:17]	Reserved	RO	Reserved	0
[16:1]	R16_ADC_DMA_NOW	RO	Current address of DMA data buffer. It can be used to calculate the number of conversions. Calculation: COUNT=(ADC_DMA_NOW-	XXXXh

			ADC_DMA_BEG)/2.	
0	Reserved	RO	Reserved	0

DMA Start Buffer Address (R16_ADC_DMA_BEG)

Bit	Name	Access	Description	Reset value
[31:17]	Reserved	RO	Reserved	0
[16:1]	R16_ADC_DMA_BEG	RW	DMA data buffer start address, the address must be 2-byte aligned.	XXXXh
0	Reserved	RO	Reserved	0

DMA End Buffer Address (R16_ADC_DMA_END)

Bit	Name	Access	Description	Reset value
[31:17]	Reserved	RO	Reserved	0
[16:1]	R16_ADC_DMA_END	RW	DMA data buffer end address (not included), address must be 2-byte aligned.	XXXXh
0	Reserved	RO	Reserved	0

Scan Configuration Register 1 (R32_ADC_SCAN_CFG1)

Bit	Name	Access	Description	Reset value
[31:28]	RB_ADC_SCAN_CH8	RW	Channel 8 analog input channel select bit: 0000: A0; 0001: A1; 0010: A2; 0011: A3; 0100: A4; 0101: A5; 0110: A6; 0111: A7; 1000: A8; 1001: A9; 1010: A10; 1011: A11; 1100: A12; 1101: A13; 1110: Battery voltage VBAT 1111: Built-in temperature sensor TS	1111
[27:24]	RB_ADC_SCAN_CH7	RW	Channel 7 analog input channel select bit: As above	1111
[23:20]	RB_ADC_SCAN_CH6	RW	Channel 6 analog input channel select bit: As above	1111
[19:16]	RB_ADC_SCAN_CH5	RW	Channel 5 analog input channel select bit: As above	1111
[15:12]	RB_ADC_SCAN_CH4	RW	Channel 4 analog input channel select bit: As above	1111

[11:8]	RB_ADC_SCAN_CH3	RW	Channel 3 analog input channel select bit: As above	1111
[7:4]	RB_ADC_SCAN_CH2	RW	Channel 2 analog input channel select bit: As above	1111
[3:0]	RB_ADC_SCAN_CH1	RW	Channel 1 analog input channel select bit: As above	1111

Scan Configuration Register 2 (R32_ADC_SCAN_CFG2)

Bit	Name	Access	Description	Reset value
31	RB_ADC_IF_SCAN_END	RW1Z	End of Scan Flag Bit, 1 indicates the end of scanning, this bit is cleared by writing 1 and invalid by writing 0.	0
30	RB_ADC_SCAN_MASK_DIS	RW	Channel enable is disabled after the ADC sampling channel is finished: 1: Disable OFF channel; 0: Enable OFF channel.	0
29	RB_ADC_IE_SCAN_END	RW	End-of-scan interrupt enable: 0: off 1: On	0
28	RB_ADC_SCAN_SEL	RW	Scan function selection: 0: TKEY 1: ADC	0
[27:24]	RB_ADC_SCAN_NUM	RW	Scan channel number.	0
[23:20]	Reserved	RO	Reserved	0
[19:16]	RB_ADC_SCAN_CH13	RW	Channel 13 Analog Input Channel Select Bit: 0000: A0; 0001: A1; 0010: A2; 0011: A3; 0100: A4; 0101: A5; 0110: A6; 0111: A7; 1000: A8; 1001: A9; 1010: A10; 1011: A11; 1100: A12; 1101: A13; 1110: Battery voltage VBAT; 1111: Built-in temperature sensor TS.	1111
[15:12]	RB_ADC_SCAN_CH12	RW	Channel 12 analog input channel select bit:	1111

			As above	
[11:8]	RB_ADC_SCAN_CH11	RW	Channel 11 analog input channel select bit: As above	1111
[7:4]	RB_ADC_SCAN_CH10	RW	Channel 10 analog input channel select bit: As above	1111
[3:0]	RB_ADC_SCAN_CH9	RW	Channel 9 analog input channel select bit: As above	1111

15.3 ADC Configuration

15.3.1 External Channel Sampling

(1) Set RB_ADC_POWER_ON in R8_ADC_CFG to 1 to enable ADC, select the sampling frequency through RB_ADC_CLK_DIV, and enable the input buffer and select signal gain through RB_ADC_BUF_EN and RB_ADC_PGA_GAIN;

(2) Set R8_ADC_CHANNEL register, and select external or internal signal channel;

(3) Set the R8_ADC_CONVERT register, set RB_ADC_START, and enable ADC conversion;

(4) Query and wait for RB_ADC_START to be automatically cleared or wait for RB_ADC_IF_EOC to be set to 1, indicating that the conversion is completed. 12-bit ADC conversion data can be obtained by reading R16_ADC_DATA. If time is enough, it is recommended to convert again and discard the ADC data obtained first;

(5) Repeat steps 2, 3 and 4 to continue to sample another channel or the next set of data;

(6) Single ADC conversion cycle: ADC sampling (4 clocks) + switching 1 clock + conversion time (12 clocks) ≈ 17 Tadc, and 1 time interval is added for continuous ADC. Among them, Tadc = Tsys @ RB_ADC_CLK_DIV;

(7) If differential input is used:

Enable differential, select 0# channel: it actually performs differential conversion on the voltage of AIN0 (positive end) and AIN2 (negative end);

Enable differential, select 1# channel: it actually performs differential conversion on the voltage of AIN1 (positive end) and AIN3 (negative end);

As a result of ADC conversion, if the data is greater than 0x800, it means that the voltage of the differential positive end is higher than the voltage of the differential negative end. If the data is less than 0x800, it means the voltage of the differential positive end is lower than the voltage of the differential negative end. Taking the PGA gain selection of 0dB as an example, the theoretically measurable voltage ranges from -1.05V to 1.05V, and 0x400 means that the voltage of the differential positive end is lower than the voltage of the differential negative end by about 0.5 Vref.

15.3.2 Temperature Sensor Sampling

(1) Set the RB_TEM_SEN_PWR_ON in R8_TEM_SENSOR register to 1 to enable the temperature sensor, set R8_ADC_CHANNEL to 15, and select the temperature sensor signal and connect to ADC input;

(2) Set RB_ADC_POWER_ON to 1 to enable ADC, set RB_ADC_DIFF_EN to 1, set RB_ADC_CLK_DIV, set RB_ADC_BUF_EN to 0, and set RB_ADC_PGA_GAIN to 011b;

(3) Set R8_ADC_CONVERT register, set RB_ADC_START to 1, and enable ADC conversion;

(4) Query and wait for RB_ADC_START to be automatically cleared or wait for RB_ADC_IF_EOC to be set to 1, read R16_ADC_DATA to obtain 12-bit ADC conversion data. In case of high requirements for accuracy, it is recommended to repeat steps 3 and 4 for several times to calculate the average value of ADC data;

(5) The temperature value is obtained according to the conversion relationship between voltage and temperature. Please refer to the evaluation board example program for details.

15.3.3 Enable DMA Automatic Continuous ADC

(1) Set ADC parameters and select channels with reference to non-DMA mode;

(2) Set R8_ADC_AUTO_CYCLE to select continuous ADC cycle;

(3) Set the R16_ADC_DMA_BEG register as the start address of buffer that stores ADC data, set the R16_ADC_DMA_END register as the end address of buffer that stores ADC data (not included), and set the RB_ADC_DMA_ENABLE in R8_ADC_CTRL_DMA to 1, to enable DMA function;
(4) Optional step. If it is needed to enable interrupts, set the corresponding interrupt enable register bit. When RB_ADC_IE_EOC=1, the ADC will be triggered by RB_ADC_IF_END_ADC to complete the interrupt. When RB_ADC_IE_EOC=0 and RB_ADC_IE_DMA_END=0, the ADC will be triggered by RB_ADC_IF_EOC to complete the interrupt;
(5) Set RB_ADC_AUTO_EN to 1 to enable automatic continuous ADC;
(6) RB_ADC_IF_EOC and RB_ADC_IF_END_ADC is set to 1 after ADC is completed, but RB_ADC_IF_END_ADC is automatically cleared after the data is taken by DMA, so you can query RB_ADC_IF_EOC to query ADC completion status.

15.4 Channel Scan

15.4.1 Scan Mode

Scan mode is used to scan a set of analog channels. The analog input channel corresponding to channel 0 in the scan queue is selected by [3:0] of the R32_ADC_CTRL register, while the analog input channels corresponding to channels 1 to 11 in the scan queue are configured by the R32_ADC_SCAN_CFG1 and R32_ADC_SCAN_CFG2 registers.

The scan mode can be set by setting the RB_ADC_SCAN_QUAN bit of the R32_ADC_SCAN_CFG2 register. If RB_ADC_SCAN_QUAN is not equal to 0, the input analog channels will be scanned sequentially in the configured order, and the scan mode can be set by setting the RB_ADC_SCAN_SEL bit of the R32_ADC_SCAN_CFG2 register. _SCAN_SEL bit of the R32_ADC_SCAN_CFG2 register to select whether TKEY or ADC is scanned.

15.4.2 Scan Interrupt

In scan mode, if the RB_ADC_IE_SCAN_END bit of the R32_ADC_SCAN_CFG2 register is set, the end-of-scan interrupt will be enabled, i.e., the interrupt will be generated at the end of the conversion of the last channel in the scan queue, at which time the RB_ADC_IF_SCAN_END bit of the R32_ADC_SCAN_CFG2 register will be set to 1 by the hardware (The bit needs to be cleared to 0 by the software) to indicate that the conversion of all channels in the scan queue is finished.

Chapter 16 Touch-Key

16.1 Introduction to Touch-Key

The chip provides a capacitance detection module, which can be used with the ADC module to realize the detection function of capacitance Touch-Key. There are a total of 14 input channels, and the supported capacitance value of Touch-Key ranges from 10pF to 100pF. The driver shielding output is provided to improve sensitivity.

16.2 Register Description

Table 16-1 Touch-Key registers

Name	Access address	Description	Reset value
R8_TKEY_COUNT	0x40001054	TouchKey charge/discharge time register	0xXX
R8_TKEY_CONVERT	0x40001056	TouchKey detection control register	0x00
R8_TKEY_CFG	0x40001057	TouchKey configuration register	0x00
R32_TKEY_SEL	0x4000107C	TouchKey selection register	0x00000000

TouchKey Charge/Discharge Time Register (R8_TKEY_COUNT)

Bit	Name	Access	Description	Reset value
[7:5]	RB_TKEY_DISCH_CNT	RW	The number of Touch-Key discharge cycles, counting in unit of ADC clock selected by RB_ADC_CLK_DIV. Calculation: discharge time = (RB_TKEY_DISCH_CNT+1)*Tadc.	XXXb
[4:0]	RB_TKEY_CHARG_CNT	RW	The number of Touch-Key charge cycle, counting in unit of ADC clock selected by RB_ADC_CLK_DIV. Calculation: charge time = (RB_TKEY_CHARG_CNT+ADC)*Tadc.	XXXXXb

TouchKey Detection Control Register (R8_TKEY_CONVERT)

Bit	Name	Access	Description	Reset value
[7:1]	Reserved	RO	Reserved	0
0	RB_TKEY_START	RW	TouchKey detection control and status, automatically cleared: 1: Start to detect/being converted; 0: Stop converting.	0

TouchKey Configuration Register (R8_TKEY_CFG)

Bit	Name	Access	Description	Reset value
[7:1]	Reserved	RO	Reserved	0
6	RB_TKEY_DMA_EN	RW	TouchKey DMA enable: 1: Enable;	0

			0: Disable.	
5	RB_TKEY_AUTO_EN	RW	TouchKey auto-trigger enable: 1: Enable; 0: Disable.	0
4	RB_TKEY_RAND_EN	RW	TouchKey RAND enable: 1: Enable; 0: Disable.	0
3	RB_TKEY_PGA_ADJ	RW	Select the operating speed of PGA in ADC: 1: High speed but slightly larger power consumption; 0: Normal speed.	0
2	RB_TKEY_DRV_EN	RW	TouchKey driver shielding enable: 1: Enable; 0: Disable.	0
1	RB_TKEY_CURRENT	RO	TouchKey charge current selection: 1: 60% current; 0: Rated current.	0
0	RB_TKEY_PWR_ON	RW	TouchKey module power enable control: 1: Enable; 0: Disable.	0

TouchKey Selection Register (R32_TKEY_SEL)

Bit	Name	Access	Description	Reset value
[31:18]	RB_TKEY_DRV_OUTEN	RW	TouchKey multiplexed driver shields each channel enable, active high.	0
[17:0]	Reserved	RO	Reserved	0

16.3 Touch-Key Configuration

Please refer to and call related subprograms.

Chapter 17 USB Full-speed/Device Controller（USBFS）

17.1 Introduction to USB Controller

CH585 and CH584 are embedded with a USB master-slave controller and transceiver with the following features:

- USB Host function and USB Device function.
- USB2.0 full-speed 12Mbps and low-speed 1.5Mbps.
- USB control transmission, bulk transmission, interrupt transmission, synchronous/real-time transmission.
- Data packets up to 64 bytes, built-in FIFO, support interrupt and DMA.

17.2 Register Description

The base address of the USB controller is 0x40008000 and the USB related registers are divided into 3 parts, some of which are multiplexed in host and device mode.

(1) USB global registers.

(2) USB device control registers.

(3) USB host control registers.

17.2.1 Description of Global Registers

Table 17-1 USB registers (Those marked in grey are controlled by RB_UC_RESET_SIE reset)

Name	Access address	Description	Reset value
R8_USB_CTRL	0x40008000	USB control register	0x06
R8_USB_INT_EN	0x40008002	USB interrupt enable register	0x00
R8_USB_DEV_AD	0x40008003	USB device address register	0x00
R32_USB_STATUS	0x40008004	USB status register	0xXX20XXXX
R8_USB_MIS_ST	0x40008005	USB miscellaneous status register	0xXX
R8_USB_INT_FG	0x40008006	USB interrupt flag register	0x20
R8_USB_INT_ST	0x40008007	USB interrupt status register	0x3X
R8_USB_RX_LEN	0x40008008	USB receiving length register	0xXX

USB Control Register (R8_USB_CTRL)

Bit	Name	Access	Description	Reset value
7	RB_UC_HOST_MODE	RW	USB working mode selection: 1: HOST; 0: DEVICE.	0
6	RB_UC_LOW_SPEED	RW	USB bus signal transmission rate selection: 1: 1.5Mbps; 0: 12Mbps.	0
5	RB_UC_DEV_PU_EN	RW	USB device enable and internal pull-up resistor control in USB device mode. If it is 1, USB device transmission is enabled and the internal pull-up resistor is also enabled. RB_UDP_PU_EN can replace this bit.	0
[5:4]	MASK_UC_SYS_CTRL	RW	See the table below to configure the USB system.	0

3	RB_UC_INT_BUSY	RW	Auto pause enable before USB transmission completion interrupt flag is not cleared: 1: It will automatically pause before the interrupt flag UIF_TRANSFER is not cleared. In device mode, it will automatically respond to busy NAK. In host mode, it will automatically pause subsequent transmission; 0: Not pause.	0
2	RB_UC_RESET_SIE	RW	Software reset control of USB protocol processor: 1: Force to reset the USB protocol processor (SIE), software is needed to cleared; 0: Not reset.	1
1	RB_UC_CLR_ALL	RW	USB FIFO and interrupt flag clear: 1: Force to empty and clear; 0: Not clear.	1
0	RB_UC_DMA_EN	RW	USB DMA and DMA interrupt control: 1: Enable the DMA function and DMA interrupt; 0: Disable DMA.	0

RB_UC_HOST_MODE and MASK_UC_SYS_CTRL constitute the USB system control combination:

RB_UC_HOST_MODE	MASK_UC_SYS_CTRL	USB system control description
0	00	Disable USB device function and disable the internal pull-up resistor. *Note: If RB_UDP_PU_EN=1, the DP pull-up resistor will be enabled by force.*
0	01	Enable USB device function and disable the internal pull-up resistor, the external pull-up is needed. *Note: If RB_UDP_PU_EN=1, the DP pull-up resistor will be enabled by force.*
0	1x	Enable USB device function and enable the internal 1.5K pull-up resistor. The pull-up resistor has priority over the pull-down resistor, and can also be used in GPIO mode.
1	00	USB host mode, in normal working status.
1	01	USB host mode, DP/DM is forced to output SE0 status.
1	10	USB host mode, DP/DM is forced to output J status.
1	11	USB host mode, DP/DM is forced to output K status/wake-up.

USB Interrupt Enable Register (R8_USB_INT_EN)

Bit	Name	Access	Description	Reset value
7	Reserved	RO	Reserved	0
6	RB_UIE_DEV_NAK	RW	In USB device mode, receive NAK interrupt: 1: Enable interrupt; 0: Disable interrupt.	0

5	RB_MOD_1_WIRE	RW	USB single wire mode enable: 1: Enable; 0: Disable.	0
4	RB_UIE_FIFO_OV	RW	FIFO overflow interrupt: 1: Enable interrupt; 0: Disable interrupt.	0
3	RB_UIE_HST_SOF	RW	In the USB host mode, SOF timing interrupt: 1: Enable interrupt; 0: Disable interrupt.	0
2	RB_UIE_SUSPEND	RW	USB bus suspend or wake-up event interrupt: 1: Enable interrupt; 0: Disable interrupt.	0
1	RB_UIE_TRANSFER	RW	USB transfer completion interrupt: 1: Enable interrupt; 0: Disable interrupt.	0
0	RB_UIE_DETECT	RW	In USB host mode, USB device connection or disconnection event interrupt: 1: Enable interrupt; 0: Disable interrupt.	0
	RB_UIE_BUS_RST	RW	In USB device mode; USB bus reset event interrupt: 1: Enable interrupt; 0: Disable interrupt.	0

USB Device Address Register (R8_USB_DEV_AD)

Bit	Name	Access	Description	Reset value
7	RB_UDA_GP_BIT	RW	USB general flag, user-defined.	0
[6:0]	MASK_USB_ADDR	RW	Host mode: address of USB device currently operated; Device mode: the address of the USB itself.	0

USB Miscellaneous Status Register (R8_USB_MIS_ST)

Bit	Name	Access	Description	Reset value
7	RB_UMS_SOF_PRES	RO	SOF packet indication status in USB host mode: 1: SOF packet will be sent, and it will be automatically delayed if there are other USB data packets; 0: No SOF package is sent.	X
6	RB_UMS_SOF_ACT	RO	SOF packet transmission status in USB host mode: 1: SOF packet is being sent out; 0: The transmission is completed or idle.	X
5	RB_UMS_SIE_FREE	RO	USB protocol processor free status: 1: Free; 0: Busy, USB transmission is in progress.	1
4	RB_UMS_R_FIFO_RDY	RO	USB receiver FIFO data ready status: 1: Receiver FIFO not empty; 0: Receiver FIFO empty.	0
3	RB_UMS_BUS_RESET	RO	USB bus reset status: 1: The current USB bus is at the reset status;	X

			0: The current USB bus is at the non-reset status.	
2	RB_UMS_SUSPEND	RO	USB suspend status: 1: The USB bus is in suspended status, and there is no USB activity for a period of time; 0: USB bus is in non-suspended status.	0
1	RB_UMS_DM_LEVEL	RO	In USB host mode, the level status of the DM pin when the device is just connected to the USB port, used to determine speed: 1: High level/ low-speed; 0: Low level/ full-speed.	0
0	RB_UMS_DEV_ATTACH	RO	USB device connection status of the port in USB host mode: 1: The port has been connected to a USB device; 0: No USB device is connected to the port.	0

USB Interrupt Flag Register (R8_USB_INT_FG)

Bit	Name	Access	Description	Reset value
7	RB_U_IS_NAK	RO	In USB device mode, NAK acknowledge status: 1: NAK acknowledge during current USB transmission; 0: No NAK acknowledge.	0
6	RB_U_TOG_OK	RO	Current USB transmission DATA0/1 synchronous flag match status: 1: Synchronous; 0: Asynchronous.	0
5	RB_U_SIE_FREE	RO	USB protocol processor idle status: 1: USB idle; 0: Busy, USB transmission is in progress.	1
4	RB_UIF_FIFO_OV	RW	USB FIFO overflow interrupt flag. Write 1 to reset: 1: FIFO overflow trigger; 0: No event.	0
3	RB_UIF_HST_SOF	RW	SOF timing interrupt flag in USB host mode. Write 1 to reset: 1: SOF packet transmission completion trigger; 0: No event.	0
2	RB_UIF_SUSPEND	RW	USB bus suspend or wake-up event interrupt flag. Write 1 to reset: 1: USB suspend event or wake-up event trigger; 0: No event.	0
1	RB_UIF_TRANSFER	RW	USB transmission completion interrupt flag. Write 1 to reset: 1: USB transmission completion trigger; 0: No event.	0
0	RB_UIF_DETECT	RW	In USB host mode, the USB device connection or disconnection event interrupt flag. Write 1 to reset:	0

			1: USB device connection or disconnection trigger is detected; 0: No event.	
	RB_UIF_BUS_RST	RW	USB bus reset event interrupt flag in USB device mode. Write 1 to reset: 1: USB bus reset event trigger; 0: No event.	0

USB Interrupt Status Register (R8_USB_INT_ST)

Bit	Name	Access	Description	Reset value
7	RB_UIS_SETUP_ACT	RO	In USB device mode, when this bit is 1, 8-byte SETUP request packet has been successfully received. SETUP token does not affect RB_UIS_TOG_OK, MASK_UIS_TOKEN, MASK_UIS_ENDP and R8_USB_RX_LEN.	0
6	RB_UIS_TOG_OK	RO	Current USB transmission DATA0/1 synchronization flag matching status. The same as RB_U_TOG_OK: 1: Synchronous; 0: Asynchronous.	0
[5:4]	MASK_UIS_TOKEN	RO	In device mode, the token PID of the current USB transfer transaction.	11b
[3:0]	MASK_UIS_ENDP	RO	In device mode, the endpoint number of the current USB transfer transaction.	XXXXb
	MASK_UIS_H_RES	RO	In host mode, the response PID identification of the current USB transfer transaction. 0000: the device has no response or timeout; Other values: respond PID.	XXXXb

MASK_UIS_TOKEN is used to identify the token PID of the current USB transfer transaction in USB device mode: 00 represents OUT packet; 10 represents IN packet; 11 represents idle; 01 undefined.

When MASK_UIS_TOKEN is not idle, and RB_UIS_SETUP_ACT is also 1, it is required to process the former first, and clear RB_UIF_TRANSFER once after the former is processed to make the former enter the idle status, and then process the latter, and finally clear RB_UIF_TRANSFER again.

MASK_UIS_H_RES is only valid in host mode. In host mode, if the host sends OUT/SETUP token packet, the PID will be the handshake packet ACK/NAK/STALL, or that device has no response/timeout. If the host sends IN token packet, the PID will the PID of the data packet (DATA0/DATA1) or the handshake packet PID.

USB Receiving Length Register (R8_USB_RX_LEN)

Bit	Name	Access	Description	Reset value
[7:0]	R8_USB_RX_LEN	RO	The number of data bytes received by the current USB endpoint.	XXh

17.2.2 Description of Device Registers

In USB device mode, the chip provides 8 sets of bidirectional endpoints, including endpoint0, endpoint1, endpoint2, endpoint3, endpoint4, endpoint5, endpoint6 and endpoint7. The maximum data packet length of each endpoint is 64 bytes.

Endpoint0 is the default endpoint and supports control transmission. The transmission and reception share a 64-byte data buffer.

Endpoint1, endpoint2 and endpoint3 each includes a transmission endpoint IN and a reception endpoint OUT.

The reception and the transmission each has a separate 64-byte or double 64-byte data buffer, supporting bulk transmission, interrupt transmission, and real-time/synchronous transmission.

Endpoint4, endpoint5, endpoint6 and endpoint7 each includes a transmission endpoint IN and a reception endpoint OUT. The reception and the transmission each has a separate 64-byte data buffer, supporting bulk transmission, interrupt transmission, and real-time/synchronous transmission.

Each set of endpoint has a control register R8_UEPn_CTRL and a transmit length register R8_UEPn_T_LEN (n=0/1/2/3/4/5/6/7), used to set the synchronization trigger bit of endpoint, the response to OUT transactions and IN transactions and the length of data to be sent.

As the necessary USB bus pull-up resistor of USB device, it can be set whether to be enabled by software at any time. When RB_UC_DEV_PU_EN of USB control register R8_USB_CTRL is set to 1, the controller will set according to the speed of RB_UD_LOW_SPEED, internally connect the pull-up resistor with the DP/DM pin of the USB bus and enable the USB device function. The above control cannot be used in sleep or power-down mode, but RB_PIN_USB_DP_PU of R16_PIN_ANALOG_IE can enable the pull-up resistor of DP pin by force without being affected by sleep mode.

When a USB bus reset or USB bus suspend or wake-up event is detected, or when the USB successfully processes data sending or receiving, the USB protocol processor will set corresponding interrupt flag. If the interrupt enabling is switched on, the corresponding interrupt request will also be generated. The application program can directly query or query and analyze the interrupt flag register R8_USB_INT_FG in the USB interrupt service program, and perform corresponding processing according to RB_UIF_BUS_RST and RB_UIF_SUSPEND. In addition, if RB_UIF_TRANSFER is valid, it is required to continue to analyze the USB interrupt state register R8_USB_INT_ST, and perform the corresponding processing according to the current endpoint number MASK_UIS_ENDP and the current transaction token PID identification MASK_UIS_TOKEN. If the synchronization trigger bit RB_UEP_R_TOG of OUT transaction of each endpoint is set in advance, RB_U_TOG_OK or RB_UIS_TOG_OK can be used to judge whether the synchronization trigger bit of the data packet received matches the synchronization trigger bit of the endpoint. If the data is synchronous, the data is valid. If the data is not synchronous, the data should be discarded. Every time the USB sending or receiving interrupt is processed, the synchronization trigger bit of corresponding endpoint should be modified correctly to detect whether the data packet sent next time and the data packet received next time are synchronous. In addition, RB_UEP_AUTO_TOG can be set to automatically flip the corresponding synchronization trigger bit after sending or receiving successfully.

The data to be sent by each endpoint is in their own buffer, and the length of the data to be sent is independently set in R8_UEPn_T_LEN. The data received by each endpoint is in their own buffer, but the length of the data received is in the USB length receiving register R8_USB_RX_LEN, and it can be distinguished according to the current endpoint number when USB receives an interrupt.

Table 17-2 USB device registers (those marked in grey are controlled by RB_UC_RESET_SIE reset)

Name	Access address	Description	Reset value
R8_UDEV_CTRL	0x40008001	USB device physical port control register	0xX0
R8_UEP4_1_MOD	0x4000800c	Endpoint 1/4 mode control register	0x00
R8_UEP2_3_MOD	0x4000800d	Endpoint 2/3 mode control register	0x00
R8_UEP567_MOD	0x4000800e	Endpoint 5/6/7 mode control register	0x00
R32_UEP0_DMA	0x40008010	Start address of endpoint0 buffer	0x000XXXXX
R32_UEP1_DMA	0x40008014	Start address of endpoint1 buffer	0x000XXXXX
R32_UEP2_DMA	0x40008018	Start address of endpoint2 buffer	0x000XXXXX
R32_UEP3_DMA	0x4000801c	Start address of endpoint3 buffer	0x000XXXXX
R8_UEP0_T_LEN	0x40008020	Endpoint0 transmission length register	0xXX
R8_UEP0_CTRL	0x40008022	Endpoint0 control register	0x00
R8_UEP1_T_LEN	0x40008024	Endpoint1 transmission length register	0xXX
R8_UEP1_CTRL	0x40008026	Endpoint1 control register	0x00
R8_UEP2_T_LEN	0x40008028	Endpoint2 transmission length register	0xXX
R8_UEP2_CTRL	0x4000802a	Endpoint2 control register	0x00
R8_UEP3_T_LEN	0x4000802c	Endpoint3 transmission length register	0xXX
R8_UEP3_CTRL	0x4000802e	Endpoint3 control register	0x00
R8_UEP4_T_LEN	0x40008030	Endpoint4 transmission length register	0xXX
R8_UEP4_CTRL	0x40008032	Endpoint4 control register	0x00
R32_UEP5_DMA	0x40008054	Start address of endpoint5 buffer	0x000XXXXX
R32_UEP6_DMA	0x40008058	Start address of endpoint6 buffer	0x000XXXXX
R32_UEP7_DMA	0x4000805c	Start address of endpoint7 buffer	0x000XXXXX
R8_UEP5_T_LEN	0x40008064	Endpoint5 transmission length register	0xXX
R8_UEP5_CTRL	0x40008066	Endpoint5 control register	0x00
R8_UEP6_T_LEN	0x40008068	Endpoint6 transmission length register	0xXX
R8_UEP6_CTRL	0x4000806a	Endpoint6 control register	0x00
R8_UEP7_T_LEN	0x4000806c	Endpoint7 transmission length register	0xXX
R8_UEP7_CTRL	0x4000806e	Endpoint7 control register	0x00
R32_EPn_MODE	0x40008070	Endpoint8-15 control register	0x00000000

USB Device Physical Port Control Register (R8_UDEV_CTRL)

Bit	Name	Access	Description	Reset value
7	RB_UD_PD_DIS	RW	Internal pull-down resistor control of UD+/UD- pin of USB device port: 1: Disable internal pull-down; 0: Enable internal pull-down. It also can be used in GPIO mode to provide pull-down resistor.	1
6	Reserved	RO	Reserved	0
5	RB_UD_DP_PIN	RO	Current UD + pin status: 1: High level;	X

			0: Low level.	
4	RB_UD_DM_PIN	RO	Current UD- pin status: 1: High level; 0: Low level.	X
3	Reserved	RO	Reserved	0
2	RB_UD_LOW_SPEED	RW	Current UD- pin status: 1: High level; 0: Low level.	0
1	RB_UD_HUB0_RESET	RW	USB HUB0 reset control	0
0	RB_UD_PORT_EN	RW	USB device physical port enable: 1: Enable; 0: Disable.	0

Endpoint 1/4 Mode Control Register (R8_UEP4_1_MOD)

Bit	Name	Access	Description	Reset value
7	RB_UEP1_RX_EN	RW	1: Enable endpoint 1 reception (OUT); 0: Disable endpoint 1 reception.	0
6	RB_UEP1_TX_EN	RW	1: Enable endpoint 1 transmission (IN); 0: Disable endpoint 1 transmission.	0
5	Reserved	RO	Reserved	0
4	RB_UEP1_BUF_MOD	RW	Endpoint 1 data buffer mode control bit.	0
3	RB_UEP4_RX_EN	RW	1: Enable endpoint 4 reception (OUT); 0: Disable endpoint 4 reception.	0
2	RB_UEP4_TX_EN	RW	1: Enable endpoint 4 transmission (IN); 0: Disable endpoint 4 transmission.	0
[1:0]	Reserved	RO	Reserved	00b

The data buffer modes of USB endpoint0 and endpoint4 are configured by a combination of bUEP4_RX_EN and bUEP4_TX_EN. Refer to the following table for details:

Table 17-3 Endpoint0/4 buffer modes

bUEP4_RX_EN	bUEP4_TX_EN	Description: arrange from low to high with UEP0 DMA as the start address
0	0	Endpoint0 single 64-byte transmit/receive shared buffers (IN and OUT).
1	0	Endpoint0 single 64-byte transmit/receive shared buffers; endpoint4 single 64-byte reception buffers (OUT).
0	1	Endpoint0 single 64-byte transmit/receive shared buffers; endpoint4 single 64-byte transmission buffers (IN).
1	1	Endpoint0 single 64-byte transmit/receive shared buffers; endpoint4 single 64-byte reception buffers (OUT); Endpoint4 single 64-byte receive buffer (IN). All 192 bytes are arranged as follows: UEP0_DMA+0 address: 64-byte start address of endpoint0 transmit/receive shared buffer; UEP0_DMA+64 address: 64-byte start address of endpoint4 receive buffer;

		UEP0_DMA+128 address: 64-byte start address of endpoint4 transmit buffer.

Endpoint 2/3 Mode Control Register (R8_UEP2_3_MOD)

Bit	Name	Access	Description	Reset value
7	RB_UEP3_RX_EN	RW	1: Enable endpoint 3 reception (OUT); 0: Disable endpoint 3 reception.	0
6	RB_UEP3_TX_EN	RW	1: Enable endpoint 3 transmission (IN); 0: Disable endpoint 3 transmission.	0
5	Reserved	RO	Reserved	0
4	RB_UEP3_BUF_MOD	RW	Endpoint 3 data buffer mode control bit.	0
3	RB_UEP2_RX_EN	RW	1: Enable endpoint 2 reception (OUT); 0: Disable endpoint 2 reception.	0
2	RB_UEP2_TX_EN	RW	1: Enable endpoint 2 transmission (IN); 0: Disable endpoint 2 transmission.	0
1	Reserved	RO	Reserved	0
0	RB_UEP2_BUF_MOD	RW	Endpoint 2 data buffer mode control bit.	0

The data buffer modes of USB endpoint1/2/3 are controlled by a combination of RB_UEPn_RX_EN, RB_UEPn_TX_EN and RB_UEPn_BUF_MOD(n=1/2/3) respectively, refer to the following table for details. Among them, in the double 64-byte buffer mode, the first 64-byte buffer will be selected based on RB_UEP_*_TOG=0 and the last 64-byte buffer will be selected based on RB_UEP_*_TOG=1 during USB data transmission, and RB_UEP_AUTO_TOG=1 is set to realize automatic switch.

Table 17-4 Endpoint n buffer modes (n=1/2/3)

RB_UEPn _RX_EN	RB_UEPn _TX_EN	RB_UEPn_ BUF_MOD	Description: Arrange from low to high with R16_UEPn_DMA as the start address
0	0	X	Endpoint is disabled, and R16_UEPn_DMA buffer is not used.
1	0	0	Single 64-byte receive buffer (OUT).
1	0	1	Double 64-byte receive buffer (OUT), selected by RB_UEP_R_TOG.
0	1	0	Single 64-byte transmit buffer (IN).
0	1	1	Double 64-byte transmit buffer (IN), selected by RB_UEP_T_TOG.
1	1	0	Single 64-byte receive buffer (OUT), single 64-byte transmit buffer (IN).
1	1	1	Double 64-byte receive buffer (OUT), selected by RB_UEP_R_TOG. Double 64-byte transmit buffer (IN), selected by RB_UEP_T_TOG. All 256 bytes are arranged as follows: UEPn_DMA+0 address: endpoint receive address when RB_UEP_R_TOG=0; UEPn_DMA+64 address: endpoint receive address when RB_UEP_R_TOG=1; UEPn_DMA+128 address: endpoint transmit address when RB_UEP_T_TOG=0; UEPn_DMA+192 address: endpoint transmit address when RB_UEP_T_TOG=1.

Endpoint 5/6/7 Mode Control Register (R8_UEP567_MOD)

Bit	Name	Access	Description	Reset value
[7:6]	Reserved	RO	Reserved	00b

5	RB_UEP7_RX_EN	RW	1: Enable endpoint 7 reception (OUT); 0: Disable endpoint 7 reception.	0
4	RB_UEP7_TX_EN	RW	1: Enable endpoint 7 transmission (IN); 0: Disable endpoint 7 transmission.	0
3	RB_UEP6_RX_EN	RW	1: Enable endpoint 6 reception (OUT); 0: Disable endpoint 6 reception.	0
2	RB_UEP6_TX_EN	RW	1: Enable endpoint 6 transmission (IN); 0: Disable endpoint 6 transmission.	0
1	RB_UEP5_RX_EN	RW	1: Enable endpoint 5 reception (OUT); 0: Disable endpoint 5 reception.	0
0	RB_UEP5_TX_EN	RW	1: Enable endpoint 5 transmission (IN); 0: Disable endpoint 5 transmission.	0

The data buffer modes of USB endpoint5, endpoint6 and endpoint7 are controlled by a combination of RB_UEPn_RX_EN and RB_UEPn_TX_EN (n=5/6/7) respectively, refer to the following table for details.

Table 17-5 Endpoint n buffer modes (n=5/6/7)

RB_UEPn_RX_EN	RB_UEPn_TX_EN	Description: Arrange from low to high with R16_UEPn_DMA as the start address
0	0	Endpoint is disabled, and R16_UEPn_DMA buffer is not used.
1	0	Single 64-byte receive buffer (OUT).
0	1	Single 64-byte transmit buffer (IN).
1	1	Single 64-byte receive buffer (OUT), single 64-byte transmit buffer (IN).

Endpoint n Buffer Start Address (R32_UEPn_DMA) (n=0/1/2/3/5/6/7)

Bit	Name	Access	Description	Reset value
[31:17]	Reserved	RO	Reserved	0
[16:0]	R32_UEPn_DMA	RW	Endpoint n buffer start address. The address must be 4-byte aligned.	XXXXXh

Note: The length of the buffer that receives data >= min (maximum data packet length possibly received + 2 bytes, 64 bytes).

Endpoint n Transmission Length Register (R8_UEPn_T_LEN) (n=0/1/2/3/4/5/6/7)

Bit	Name	Access	Description	Reset value
7	Reserved	RO	Reserved	0
[6:0]	R8_UEPn_T_LEN	RW	Set the number of data bytes that USB endpoint n is ready to send.	XXh

Endpoint 2 Transmission Length Register (R8_UEPn_T_LEN)

Bit	Name	Access	Description	Reset value
7	R8_UEP2_HOST_PID3	RW	Bit 3 of the token identification PID in host mode.	0
[6:0]	R8_UEP2_T_LEN	RW	Set the number of data bytes that USB	XXh

			endpoint n is ready to send.	

Endpoint n Control Register (R8_UEPn_CTRL) (n=0/1/2/3/4/5/6/7)

Bit	Name	Access	Description	Reset value
7	RB_UEP_R_TOG	RW	Expected synchronization trigger bit of the receiver (process OUT transactions) of USB endpoint n: 1: Expect DATA1; 0: Expect DATA0.	0
6	RB_UEP_T_TOG	RW	Synchronization trigger bit of the transmitter (process IN transactions) of USB endpoint n 1: Transmit DATA1; 0: Transmit DATA0.	0
5	Reserved	RO	Reserved	0
4	RB_UEP_AUTO_TOG	RW	Synchronization trigger bit auto flip enable control bit: 1: After the data is sent or received successfully, the corresponding synchronization trigger bit is automatically flipped; 0: Not flipped automatically, but can be switched manually. It only supports endpoint 1/2/3/5/6/7.	0
[3:2]	MASK_UEP_R_RES	RW	Control on the response to OUT transactions by the receiver of USB endpoint n: 00: Respond ACK; 01: Timeout/no response, used for real-time/synchronous transmission of non-endpoint 0; 10: Respond to NAK or busy; 11: Respond to STALL or error.	00b
[1:0]	MASK_UEP_T_RES	RW	Control on response to IN transactions of the transmitter of endpoint n: 00: DATA0/DATA1 data is ready and ACK is expected; 01: Respond to DATA0/DATA1 and expect no response, used for real-time/synchronous transmission of non-endpoint 0; 10: Respond to NAK or busy; 11: Respond to STALL or error.	00b

Endpoint n Control Register (R32_EPX_MODE) (n=8/9/10/11/12/13/14/15)

Bit	Name	Access	Description	Reset value
[31:24]	Reserved	RO	Reserved	00h

[23:17]	RB_EP_T_AF	RW	1: Enables endpoint 8-15 transmit Alternate; 0: Disable endpoint 8-15 transmit Alternate.	00h
16	Reserved	RO	Reserved	0
[15:8]	RB_EP_R_EN	RW	1: Enables endpoint 8-15 reception (OUT); 0: Disable endpoint 8-15 reception.	00h
[7:0]	RB_EP_T_EN	RW	1: Enables endpoints 8-15 transmit (IN); 0: Disable endpoint 8-15 transmit.	00h

17.2.3 Description of Host Registers

In USB host mode, the chip provides 1 set of bidirectional host endpoints, including a transmission endpoint OUT and a reception endpoint IN. The maximum length of data packet is 64 bytes. It supports control transmission, interrupt transmission, bulk transmission and real-time/synchronous transmission.

Each USB transaction initiated by host endpoint always automatically sets the RB_UIF_TRANSFER interrupt flag after the processing ends. The application program can directly query or query and analyze the interrupt flag register (R8_USB_INT_FG) in the USB interrupt service program, and perform corresponding processing according to each interrupt flag. In addition, if RB_UIF_TRANSFER is valid, it is required to continue to analyze the USB interrupt status register (R8_USB_INT_ST), and perform the corresponding processing according to the response PID identification (MASK_UIS_H_RES) of the current USB transmission transaction.

If the synchronization trigger bit (RB_UH_R_TOG) of IN transaction of host reception endpoint is set in advance, whether the synchronization trigger bit of the data packet received matches the synchronization trigger bit of the endpoint can be judged through RB_U_TOG_OK or RB_UIS_TOG_OK. If the data is synchronous, the data is valid. If the data is not synchronous, the data should be discarded. Each time the USB sending or receiving interrupt is processed, the synchronization trigger bit of corresponding host endpoint should be modified correctly to synchronize the data packet sent next time and detect whether the data packet received next time is synchronous. In addition, RB_UH_T_AUTO_TOG and RB_UH_R_AUTO_TOG can be set to automatically flip the corresponding synchronization trigger bit after sending or receiving successfully.

USB host token setting register (R8_UH_EP_PID) is used to set the endpoint number of the target device being operated and the token PID packet identification of the USB transmission transaction. The data corresponding to the SETUP token and OUT token is provided by the host transmission endpoint. The data to be sent is in the R32_UH_TX_DMA buffer, and the length of the data to be sent is set in R16_UH_TX_LEN. The data corresponding to the IN token is returned by the target device to the host reception endpoint, the data received is stored in the R32_UH_RX_DMA buffer, and the length of data received is stored in R8_USB_RX_LEN.

Table 17-6 USB host registers (Those marked in grey are controlled by RB_UC_RESET_SIE reset)

Name	Access address	Description	Reset value
R8_UHOST_CTRL	0x40008001	USB host physical port control register	0xX0
R8_UH_EP_MOD	0x4000800d	USB host endpoint mode control register	0x00
R32_UH_RX_DMA	0x40008018	USB host receive buffer start address	0x000XXXXX
R32_UH_TX_DMA	0x4000801c	USB host transmit buffer start address	0x000XXXXX
R8_UH_SETUP	0x40008026	USB host auxiliary setting register	0x00
R8_UH_EP_PID	0x40008028	USB host token setting register	0x00
R8_UH_RX_CTRL	0x4000802a	USB host reception endpoint control register	0x00
R8_UH_TX_LEN	0x4000802c	USB host transmission length register	0xXX

R8_UH_TX_CTRL	0x4000802e	USB host transmission endpoint control register	0x00

USB Host Physical Port Control Register (R8_UHOST_CTRL)

Bit	Name	Access	Description	Reset value
7	RB_UH_PD_DIS	RW	Internal pull-down resistor control bit of UD+/UD- pin of USB host port: 1: Disable internal pull-down; 0: Enable internal pull-down. It can be used in GPIO mode to provide pull-down resistor.	1
6	Reserved	RO	Reserved	0
5	RB_UH_DP_PIN	RO	Current UD + pin status: 1: High level; 0: Low level.	X
4	RB_UH_DM_PIN	RO	Current UD- pin status: 1: High level; 0: Low level.	X
3	Reserved	RO	Reserved	0
2	RB_UH_LOW_SPEED	RW	USB host port low-speed mode enable bit: 1: Select 1.5Mbps low-speed mode; 0: Select 12Mbps full-speed mode.	0
1	RB_UH_BUS_RESET	RW	USB host mode bus reset: 1: Output USB bus reset by force; 0: End output.	0
0	RB_UH_PORT_EN	RW	USB host port enable: 1: Enable the host port; 0: Disable the host port. The bit is automatically cleared to 0 when the USB device is disconnected.	0

USB Host Endpoint Mode Control Register (R8_UH_EP_MOD)

Bit	Name	Access	Description	Reset value
7	Reserved	RO	Reserved	0
6	RB_UH_EP_TX_EN	RW	Host transmission endpoint transmit (SETUP/OUT) enable: 1: Enable endpoint transmission; 0: Disable endpoint transmission.	0
5	Reserved	RO	Reserved	0
4	RB_UH_EP_TBUF_MOD	RW	Host transmission endpoint transmit data buffer mode control.	0
3	RB_UH_EP_RX_EN	RW	Host reception endpoint reception (IN) enable: 1: Enable endpoint reception; 0: Disable endpoint reception.	0
[2:1]	Reserved	RO	Reserved	0
0	RB_UH_EP_RBUF_M	RW	USB host reception endpoint reception data	0

	OD		buffer mode control.	

The host transmission endpoint data buffer modes are controlled by a combination of RB_UH_EP_TX_EN and RB_UH_EP_TBUF_MOD, refer to the following table.

Table 17-7 Host transmit buffer modes

RB_UH_EP_TX_EN	RB_UH_EP_TBUF_MOD	Description: Take R32_UH_TX_DMA as start address
0	X	Endpoint is disabled, and R32_UH_TX_DMA buffer is not used.
1	0	Single 64-byte transmit buffer (SETUP/OUT).
1	1	Double 64-byte transmit buffer, selected by RB_UH_T_TOG: When RB_UH_T_TOG=0, select the first 64-byte buffer; When RB_UH_R_TOG=1, select the last 64-byte buffer.

Table 17-8 Host receive buffer modes

RB_UH_EP_RX_EN	RB_UH_EP_RBUF_MOD	Description: Take R32_UH_TX_DMA as start address
0	X	Endpoint is disabled, and the R32_UH_RX_DMA buffer is not used.
1	0	Single 64-byte receive buffer (IN).
1	1	Double 64-byte receive buffer, selected by RB_UH_R_TOG: When RB_UH_R_TOG=0, select the first 64-byte buffer; When RB_UH_R_TOG=1, select the last 64-byte buffer.

USB Host Receive Buffer Start Address (R32_UH_RX_DMA)

Bit	Name	Access	Description	Reset value
[31:17]	Reserved	RO	Reserved	0
[16:0]	R16_UH_RX_DMA	RW	Host endpoint data receive buffer start address. The lower 15 bits are valid, and the address must be 4 bytes aligned.	XXXXXh

USB Host Transmit Buffer Start Address (R32_UH_TX_DMA)

Bit	Name	Access	Description	Reset value
[31:17]	Reserved	RO	Reserved	0
[16:0]	R32_UH_TX_DMA	RW	Host endpoint data transmit buffer start address. The lower 15 bits are valid, and the address must be 4 bytes aligned.	XXXXXh

USB Host Auxiliary Setting Register (R8_UH_SETUP)

Bit	Name	Access	Description	Reset value
7	RB_UH_PRE_PID_EN	RW	Low-speed preamble packet PRE PID enable bit:	0

			1: Enable, used to communicate with low-speed USB device through an external HUB. 0: Disable the low-speed preamble packet.	
6	RB_UH_SOF_EN	RW	Automatically generate SOF packet enable bit: 1: The host automatically generates SOF packet; 0: The host does not automatically generate SOF packet, but can generate manually.	0
[5:0]	Reserved	RO	Reserved	000000b

USB Host Token Setting Register (R8_UH_EP_PID)

Bit	Name	Access	Description	Reset value
[7:4]	MASK_UH_TOKEN	RW	Set the token PID packet identification of this USB transmission transaction.	0000b
[3:0]	MASK_UH_ENDP	RW	Set the endpoint number of the target device being operated this time.	0000b

USB Host Reception Endpoint Control Register (R8_UH_RX_CTRL)

Bit	Name	Access	Description	Reset value
7	RB_UH_R_TOG	RW	Synchronization trigger bit expected by USB host receiver (process IN transaction): 1: Expect DATA1; 0: Expect DATA0.	0
[6:5]	Reserved	RO	Reserved	00b
4	RB_UH_R_AUTO_TOG	RW	Synchronization trigger bit auto toggle enable control bit: 1: After the data is successfully received, the corresponding expected synchronization trigger bit (RB_UH_R_TOG) is automatically toggled; 0: It is not toggled automatically, but can be switched manually.	0
3	Reserved	RO	Reserved	0
2	RB_UH_R_RES	RW	Control on response to IN transactions by host receiver: 1: No response, used for real-time/synchronous transmission of non-endpoint 0; 0: Respond to ACK.	0
[1:0]	Reserved	RO	Reserved	00b

USB Host Transmission Length Register (R8_UH_TX_LEN)

Bit	Name	Access	Description	Reset value
[7:0]	R8_UH_TX_LEN	RW	Set the number of data bytes that USB host transmission endpoint is ready to send.	XXh

USB Host Transmission Endpoint Control Register (R8_UH_TX_CTRL)

Bit	Name	Access	Description	Reset value
7	Reserved	RO	Reserved	0
6	RB_UH_T_TOG	RW	Synchronization trigger bit prepared by USB host transmitter (process SETUP/OUT transactions): 1: Transmit DATA1; 0: Transmit DATA0.	0
5	Reserved	RO	Reserved	0
4	RB_UH_T_AUTO_TOG	RW	Synchronization trigger bit auto toggle enable control bit: 1: The corresponding synchronization trigger bit (RB_UH_T_TOG) is toggled after the data is sent successfully; 0: It is not toggled automatically, but can be switched manually.	0
[3:1]	Reserved	RO	Reserved	000b
0	RB_UH_T_RES	RW	Response control bit of USB host transmitter to SETUP/OUT transaction: 1: Expect no response, used for real-time/synchronous transmission of non-endpoint0; 0: Expect to respond to ACK.	0

Chapter 18 USB High-speed/Device Controller （USBFS）

18.1 Introduction to USB High-speed Controller

The CH585 has a built-in set of Hi-Speed USB 2.0 controllers and a 480Mbps USB-PHY physical layer transceiver. The Hi-Speed USB 2.0 controllers have dual roles as host and device controllers. When used as host controllers, they support low-speed, full-speed and high-speed USB devices. When used as a device controller, it can be flexibly set to low-speed, full-speed, or high-speed mode to suit various applications.

USB Hi-Speed Controller features are listed below:

- Support USB 2.0, USB 1.1, and USB 1.0 protocol specifications.
- Support up to 1024-byte packets, built-in FIFO, interrupt and DMA.
- Support control transfer, bulk transfer, interrupt transfer, real-time/synchronous transfer.
- Provide bus reset, hang, wake-up and resume functions.

18.2 Register Description

The base address of the USB high-speed controller is 0x40009000 and 0x40009100. The USB related registers are divided into 2 parts:

(1) USB high-speed device control controller

(2) USB high-speed host control controller

18.2.1 Description of Device Registers

Table 18-2 USB device registers

Name	Access address	Description	Reset value
R8_USB2_CTRL	0x40009000	USBHS control register	0x07
R8_USB2_BASE_MODE	0x40009001	USBHS mode control register	0x00
R8_USB2_INT_EN	0x40009002	USBHS interrupt enable register	0x00
R8_USB2_DEV_AD	0x40009003	USBHS device address register	0x00
R8_USB2_WAKE_CTRL	0x40009004	USBHS remote wakeup register	0x00
R8_USB2_TEST_MODE	0x40009005	USBHS test mode register	0x00
R16_USB2_LPM_DATA	0x40009006	USBHS power management register	0x8000
R8_USB2_INT_FG	0x40009008	USBHS interrupt flag register	0x00
R8_USB2_INT_ST	0x40009009	USBHS interrupt status register	0x00
R8_USB2_MIS_ST	0x4000900A	USBHS miscellaneous status register	0x00
R16_USB2_FRAME_NO	0x4000900C	USBHS frame number register	0x0000
R16_USB2_BUS	0x4000900E	USBHS bus status register	0x0000
R16_U2EP_TX_EN	0x40009010	USBHS endpoint transmit enable register	0x0000
R16_U2EP_RX_EN	0x40009012	USBHS endpoint receive enable register	0x0000
R16_U2EP_T_TOG_AUTO	0x40009014	USBHS endpoint transmit auto-flip enable register	0x0000
R16_U2EP_R_TOG_AUTO	0x40009016	USBHS endpoint receive auto-flip enable register	0x0000

R8_U2EP_T_BURST	0x40009018	USBHS endpoint transmit burst register	0x00
R8_U2EP_T_BURST_MODE	0x40009019	USBHS endpoint transmit burst mode register	0x00
R8_U2EP_R_BURST	0x4000901A	USBHS endpoint receive burst register	0x00
R8_U2EP_R_RES_MODE	0x4000901B	USBHS endpoint receive reply mode register	0x00
R32_U2EP_AF_MODE	0x4000901C	USBHS endpoint alternate register	0x00000000
R32_U2EP0_DMA	0x40009020	Start address register of endpoint 0 receive buffer	0x000XXXXX
R32_U2EP1_RX_DMA	0x40009024	Start address register of endpoint 1 receive buffer	0x000XXXXX
R32_U2EP2_RX_DMA	0x40009028	Start address register of endpoint 2 receive buffer	0x000XXXXX
R32_U2EP3_RX_DMA	0x4000902C	Start address register of endpoint 3 receive buffer	0x000XXXXX
R32_U2EP4_RX_DMA	0x40009030	Start address register of endpoint 4 receive buffer	0x000XXXXX
R32_U2EP5_RX_DMA	0x40009034	Start address register of endpoint 5 receive buffer	0x000XXXXX
R32_U2EP6_RX_DMA	0x40009038	Start address register of endpoint 6 receive buffer	0x000XXXXX
R32_U2EP7_RX_DMA	0x4000903C	Start address register of endpoint 7 receive buffer	0x000XXXXX
R32_U2EP1_TX_DMA	0x40009040	Start address register of endpoint 1 transmit buffer	0x000XXXXX
R32_U2EP2_TX_DMA	0x40009044	Start address register of endpoint 2 transmit buffer	0x000XXXXX
R32_U2EP3_TX_DMA	0x40009048	Start address register of endpoint 3 transmit buffer	0x000XXXXX
R32_U2EP4_TX_DMA	0x4000904C	Start address register of endpoint 4 transmit buffer	0x000XXXXX
R32_U2EP5_TX_DMA	0x40009050	Start address register of endpoint 5 transmit buffer	0x000XXXXX
R32_U2EP6_TX_DMA	0x40009054	Start address register of endpoint 6 transmit buffer	0x000XXXXX
R32_U2EP7_TX_DMA	0x40009058	Start address register of endpoint 7 transmit buffer	0x000XXXXX
R32_U2EP0_MAX_LEN	0x4000905C	Endpoint 0 maximum length packet register	0x000000XX
R32_U2EP1_MAX_LEN	0x40009060	Endpoint 1 maximum length packet register	0x00000XXX
R32_U2EP2_MAX_LEN	0x40009064	Endpoint 2 maximum length packet register	0x00000XXX
R32_U2EP3_MAX_LEN	0x40009068	Endpoint 3 maximum length packet register	0x00000XXX
R32_U2EP4_MAX_LEN	0x4000906C	Endpoint 4 maximum length packet register	0x00000XXX
R32_U2EP5_MAX_LEN	0x40009070	Endpoint 5 maximum length packet register	0x00000XXX
R32_U2EP6_MAX_LEN	0x40009074	Endpoint 6 maximum length packet register	0x00000XXX
R32_U2EP7_MAX_LEN	0x40009078	Endpoint 7 maximum length packet register	0x00000XXX

R16_U2EP0_RX_LEN	0x4000907C	Endpoint 0 receive length register	0x00XX
R16_U2EP1_RX_LEN	0x40009080	Endpoint 1 single reception length register	0xXXXX
R16_U2EP1_R_SIZE	0x40009082	Endpoint 1 total reception data length register	0xXXXX
R16_U2EP2_RX_LEN	0x40009084	Endpoint 2 single reception length register	0xXXXX
R16_U2EP2_R_SIZE	0x40009086	Endpoint 2 total reception data length register	0xXXXX
R16_U2EP3_RX_LEN	0x40009088	Endpoint 3 single reception length register	0xXXXX
R16_U2EP3_R_SIZE	0x4000908A	Endpoint 3 total reception data length register	0xXXXX
R16_U2EP4_RX_LEN	0x4000908C	Endpoint 4 single reception length register	0xXXXX
R16_U2EP4_R_SIZE	0x4000908E	Endpoint 4 total reception data length register	0xXXXX
R16_U2EP5_RX_LEN	0x40009090	Endpoint 5 single reception length register	0xXXXX
R16_U2EP5_R_SIZE	0x40009092	Endpoint 5 total reception data length register	0xXXXX
R16_U2EP6_RX_LEN	0x40009094	Endpoint 6 single reception length register	0xXXXX
R16_U2EP6_R_SIZE	0x40009096	Endpoint 6 total reception data length register	0xXXXX
R16_U2EP7_RX_LEN	0x40009098	Endpoint 7 single reception length register	0xXXXX
R16_U2EP7_R_SIZE	0x4000909A	Endpoint 7 total reception data length register	0xXXXX
R16_U2EP0_T_LEN	0x4000909C	Endpoint 0 transmit length register	0x00XX
R8_U2EP0_TX_CTRL	0x4000909E	Endpoint 0 transmit control register	0x00
R8_U2EP0_RX_CTRL	0x4000909F	Endpoint 0 receive control register	0x00
R16_U2EP1_T_LEN	0x400090A0	Endpoint 1 transmit length register	0x0000
R8_U2EP1_TX_CTRL	0x400090A2	Endpoint 1 transmit control register	0x00
R8_U2EP1_RX_CTRL	0x400090A3	Endpoint 1 receive control register	0x00
R16_U2EP2_T_LEN	0x400090A4	Endpoint 2 transmit length register	0x0000
R8_U2EP2_TX_CTRL	0x400090A6	Endpoint 2 transmit control register	0x00
R8_U2EP2_RX_CTRL	0x400090A7	Endpoint 2 receive control register	0x00
R16_U2EP3_T_LEN	0x400090A8	Endpoint 3 transmit length register	0x0000
R8_U2EP3_TX_CTRL	0x400090AA	Endpoint 3 transmit control register	0x00
R8_U2EP3_RX_CTRL	0x400090AB	Endpoint 3 receive control register	0x00
R16_U2EP4_T_LEN	0x400090AC	Endpoint 4 transmit length register	0x0000
R8_U2EP4_TX_CTRL	0x400090AE	Endpoint 4 transmit control register	0x00
R8_U2EP4_RX_CTRL	0x400090AF	Endpoint 4 receive control register	0x00
R16_U2EP5_T_LEN	0x400090B0	Endpoint 5 transmit length register	0x0000
R8_U2EP5_TX_CTRL	0x400090B2	Endpoint 5 transmit control register	0x00
R8_U2EP5_RX_CTRL	0x400090B3	Endpoint 5 receive control register	0x00
R16_U2EP6_T_LEN	0x400090B4	Endpoint 6 transmit length register	0x0000
R8_U2EP6_TX_CTRL	0x400090B6	Endpoint 6 transmit control register	0x00
R8_U2EP6_RX_CTRL	0x400090B7	Endpoint 6 receive control register	0x00
R16_U2EP7_T_LEN	0x400090B8	Endpoint 7 transmit length register	0x0000
R8_U2EP7_TX_CTRL	0x400090BA	Endpoint 7 transmit control register	0x00
R8_U2EP7_RX_CTRL	0x400090BB	Endpoint 7 receive control register	0x00
R16_U2EP_T_ISO	0x400090BC	USBHS endpoint transmit synchronization mode enable register.	0x0000
R16_U2EP_R_ISO	0x400090BE	USBHS endpoint receive synchronization mode enable register.	0x0000

USBHS Control Register (R8_USB2_CTRL)

Bit	Name	Access	Description	Reset value
7	RB_UD_LPM_EN	RW	LPM enable: 1: Enable; 0: Disable.	0x0
6	Reserved	RO	Reserved	0x0
5	RB_UD_DEV_EN	RW	USB device enable: 1: Enable; 0: Disable.	0x0
4	RB_UD_DMA_EN	RW	DMA transmission enable: 0: Disable; 1: Enable.	0x0
3	RB_UD_PHY_SUSPENDM	RW	USB PHY suspend: 0: Suspended; 1: Normal work.	0x0
2	RB_UD_CLR_ALL	RW	Clear all interrupt flags. 1: Clear USB interrupt flag and FIFO, software clearing required; 0: No clearing.	0x1
1	RB_UD_RST_SIE	RW	USB protocol processor reset 1: Forced reset of the USB protocol processor (SIE), including endpoint-related registers, requires software clearing; 0: No reset.	0x1
0	RB_UD_RST_LINK	RW	LINK layer reset 1: USB Link layer reset; 0: No reset.	0x1

USBHS Mode Control Register (R8_USB2_BASE_MODE)

Bit	Name	Access	Description	Reset value
[7:2]	Reserved	RO	Reserved	0x0
[1:0]	RB_UD_SPEED_TYPE[1:0]	RW	Expected speed mode of device: 00: Full-speed device; 01: High-speed; 10: Low-speed; 11: Reserved.	0x0

USBHS Interrupt Enable Register (R8_USB2_INT_EN)

Bit	Name	Access	Description	Reset value
7	RB_UDIE_FIFO_OVER	RW	FIFO overflow interrupt. 1: Enable interrupt; 0: Disable interrupt.	0x0

6	RB_UDIE_LINK_RDY	RW	USB link interrupt enable. 1: Enable interrupt; 0: Disable interrupt.	0x0
5	RB_UDIE_SOF_ACT	RW	Receive SOF packet interrupt enable. 1: Enable interrupt; 0: Disable interrupt.	0x0
4	RB_UDIE_TRANSFER	RW	USB transmission end interrupt enable. 1: Enable interrupt; 0: Disable interrupt.	0x0
3	RB_UDIE_LPM_ACT	RW	LPM transmission end interrupt enable. 1: Enable interrupt; 0: Disable interrupt.	0x0
2	RB_UDIE_BUS_SLEEP	RW	USB bus sleep interrupt enable. 1: Enable interrupt; 0: Disable interrupt.	0x0
1	RB_UDIE_SUSPEND	RW	USB bus pause interrupt enable. 1: Enable interrupt; 0: Disable interrupt.	0x0
0	RB_UDIE_BUS_RST	RW	USB bus reset interrupt enable. 1: Enable interrupt; 0: Disable interrupt.	0x0

USBHS Device Address Register (R8_USB2_DEV_AD)

Bit	Name	Access	Description	Reset value
7	Reserved	RO	Reserved	0x0
[6:0]	RB_UD_DEV_ADDR[6:0]	RW	USB device address	0x0

USBHS Remote Wake-up Register (R8_USB2_WAKE_CTRL)

Bit	Name	Access	Description	Reset value
[7:1]	Reserved	RO	Reserved	0x0
0	RB_UD_REMOTE_WKUP	RW1Z	Remote wake-up, hardware automatically reset.	0x0

USBHS Test Mode Register (R8_USB2_TEST_MODE)

Bit	Name	Access	Description	Reset value
7	RB_UD_TEST_EN	RW	Test mode enable.	0x0
[6:4]	Reserved	RO	Reserved	0x0
3	RB_UD_TEST_SE0NAK	RW	Test mode, outputs a packet. The packet uses the data address of endpoint 4 as well as the length, and the TOG is DATA0.	0x0

2	RB_UD_TEST_PKT	RW	Test mode, output a package. DATA0, the data address and length of endpoint 4 (not used by virtual devices).	0x0
1	RB_UD_TEST_K	RW	Test mode, output K.	0x0
0	RB_UD_TEST_J	RW	Test mode, output J.	0x0

USBHS Power Management Register (R16_USB2_LPM_DATA)

Bit	Name	Access	Description	Reset value
15	RB_UD_LPM_BUSY	RW	Power management is busy.	0x1
[14:11]	Reserved	RO	Reserved	0x0
[10:0]	RB_UD_LPM_DATA[10:0]	RO	Power management data.	0x0

USBHS Interrupt Flag Register (R8_USB2_INT_FG)

Bit	Name	Access	Description	Reset value
7	RB_UDIF_FIFO_OV	RW1Z	FIFO overflow interrupt flag bit, write 1 to clear. 1: FIFO overflow trigger; 0: No event.	0x0
6	RB_UDIF_LINK_RDY	RW1Z	USB link interrupt flag bit, write 1 to clear. 1: USB link event trigger; 0: No event.	0x0
5	RB_UDIF_RX_SOF	RW1Z	Receive SOF packet interrupt flag bit, and write 1 to clear it. 1: Receive SOF packet event trigger; 0: No event.	0x0
4	RB_UDIF_RTX_ACT	RO	USB transmission end interrupt flag bit: Reception is cleared by RB_UEP_R_DONE; Transmit cleared by RB_UEP_T_DONE.	0x0
3	RB_UDIF_LPM_ACT	RW1Z	LPM transmission end interrupt flag bit, write 1 to clear. 1: LPM transmission end event trigger; 0: No event.	0x0
2	RB_UDIF_BUS_SLEEP	RW1Z	USB bus sleep interrupt flag bit, when enable LPM, enter L1 (Sleep) status will be triggered, write 1 to clear. 1: USB bus sleep event trigger; 0: No event.	0x0
1	RB_UDIF_SUSPEND	RW1Z	USB bus suspends the interrupt flag bit, write 1 to clear. 1: USB suspend event trigger; 0: No event.	0x0

0	RB_UDIF_BUS_RST	RW1Z	USB bus resets the interrupt flag bit, write 1 to clear. 1: USB bus reset event triggered; 0: No event.	0x0

USBHS Interrupt Status Register (R8_USB2_INT_ST)

Bit	Name	Access	Description	Reset value
[7:5]	Reserved	RO	Reserved	0x0
4	RB_UDIS_EP_DIR	RO	Endpoint data transmission direction: 1: Endpoint IN data; 0: Endpoint OUT/SETUP data.	0x0
3	Reserved	RO	Reserved	0x0
[2:0]	RB_UDIS_EP_ID_MASK[2:0]	RO	The endpoint number where the data transmission occurred.	0x0

USBHS Miscellaneous Status Register (R8_USB2_MIS_ST)

Bit	Name	Access	Description	Reset value
7	RB_UDMS_HS_MOD	RO	Whether the host is at high speed.	0x0
[6:5]	Reserved	RO	Reserved	0x0
4	RB_UDMS_SUSP_REQ	RO	USB suspend request.	0x0
3	RB_UDMS_SIE_FREE	RO	USB idle status.	0x0
2	RB_UDMS_SLEEP	RO	USB sleep status.	0x0
1	RB_UDMS_SUSPEND	RO	USB suspended status. 1: The USB bus is suspended, and there is no USB activity for some time; 0: The USB bus is in a non-suspended state.	0x0
0	RB_UDMS_READY	RO	USB link status.	0x0

USBHS Frame Number Register (R16_USB2_FRAME_NO)

Bit	Name	Access	Description	Reset value
[15:13]	RB_UD_MFRAME_NO[2:0]	RO	The received micro-frame number.	0x0
[12:11]	Reserved	RO	Reserved	0x0
[10:0]	RB_UD_FRAME_NO[10:0]	RO	The received frame number.	0x0

USBHS Bus Status Register (R16_USB2_BUS)

Bit	Name	Access	Description	Reset value
[15:4]	Reserved	RO	Reserved	0x0
3	RB_USB_DM_ST	RO	UDM status.	0x0
2	RB_USB_DP_ST	RO	UDP status.	0x0
1	Reserved	RO	Reserved	0x0
0	RB_USB_WAKEUP	RO	USB wake-up (active high).	0x0

USBHS Endpoint Transmit Enable Register (R16_U2EP_TX_EN)

Bit	Name	Access	Description	Reset value
[15:0]	RB_UEP_TX_EN[15:0]	RW	0~15 endpoint transmit enable: 1: Enable; 0: Disable.	0x0

USBHS Endpoint Receive Enable Register (R16_U2EP_RX_EN)

Bit	Name	Access	Description	Reset value
[15:0]	RB_UEP_RX_EN[15:0]	RW	0~15 endpoint receive enable: 1: Enable; 0: Disable.	0x0

USBHS Endpoint Transmit Auto-flip Enable Register (R16_U2EP_T_TOG_AUTO)

Bit	Name	Access	Description	Reset value
[15:8]	Reserved	RO	Reserved	0x0
[7:0]	RB_UEP_T_TOG_AUTO[7:0]	RW	0~7 endpoint synchronization trigger bit auto-flip enable 1: Auto-flip after data transmission is successful; 0: Manually control the flip. *Note: Endpoint 0 only supports manual control of flip.*	0x0

USBHS Endpoint Receive Auto-flip Enable Register (R16_U2EP_R_TOG_AUTO)

Bit	Name	Access	Description	Reset value
[15:8]	Reserved	RO	Reserved	0x0
[7:0]	RB_UEP_R_TOG_AUTO[7:0]	RW	0~7 endpoint synchronization trigger bit auto-flip enable 1: Auto-flip after data reception is successful; 0: Manually control the flip. *Note: Endpoint 0 only supports manual control of flip.*	0x0

USBHS Endpoint Transmit Burst Register (R8_U2EP_T_BURST)

Bit	Name	Access	Description	Reset value
[7:0]	RB_UEP_T_BURST_EN[7:0]	RW	0~7 endpoint burst transmit enable: 1: Enable; 0: Disable.	0x0

USBHS Endpoint Transmit Burst Mode Register (R8_U2EP_T_BURST_MODE)

Bit	Name	Access	Description	Reset value
[7:0]	RB_UEP_T_BURST_MO	RW	0~7 endpoint burst transmit mode:	0x0

	DE[7:0]		1: No 0-length data is transmitted in burst mode; 0: Transmit 0-length data in burst mode.	

USBHS Endpoint Receive Burst Register (R8_U2EP_R_BURST)

Bit	Name	Access	Description	Reset value
[7:0]	RB_UEP_R_BURST_EN[7:0]	RW	0~7 endpoint burst receive enable: 1: Enable; 0: Disable.	0x0

USBHS Endpoint Receive Reply Mode Register (R8_U2EP_R_RES_MODE)

Bit	Name	Access	Description	Reset value
[7:0]	RB_UEP_R_RES_MODE[7:0]	RW	0~7 endpoint receive return mode: 1: NYET; 0: ACK.	0x0

USBHS Endpoint Alternate Register (R32_U2EP_AF_MODE)

Bit	Name	Access	Description	Reset value
[31:8]	Reserved	RO	Reserved	0x0
[7:1]	RB_UEP_T_AF[6:0]	RW	1~7 endpoint alternate enable: 1: Alternate 9-15; 0: Alternate 1-7.	0x0
0	Reserved	RO	Reserved	0x0

Start Address Register of Endpoint 0 Buffer (R32_U2EP0_DMA)

Bit	Name	Access	Description	Reset value
[31:17]	Reserved	RO	Reserved	0x0
[16:0]	UEP0_DMA[16:0]	RW	Buffer start address of endpoint 0.	0xX

Start Address Register of Endpoint n Receive Buffer (R32_U2EPn_RX_DMA) (n=1~7)

Bit	Name	Access	Description	Reset value
[31:17]	Reserved	RO	Reserved	0x0
[16:0]	UEPn_RX_DMA[16:0]	RW	The start address of the receive buffer for endpoint n. The address must be 4 bytes aligned.	0xX

Start Address Register of Endpoint n Transmit Buffer (R32_U2EPn_TX_DMA) (n=1~7)

Bit	Name	Access	Description	Reset value
[31:17]	Reserved	RO	Reserved	0x0
[16:0]	UEPn_TX_DMA[16:0]	RW	The start address of the transmit buffer of endpoint n. The address must be 4 bytes aligned.	0xX

Endpoint 0 Maximum Length Packet Register (R32_U2EPn_MAX_LEN)

Bit	Name	Access	Description	Reset value
[31:7]	Reserved	RO	Reserved	0x0
[6:0]	UEPn_MAX_LEN[6:0]	RW	The maximum length that the endpoint 0 DMA can be offset.	0xX

Endpoint n Maximum Length Packet Register (R32_U2EPn_MAX_LEN) (n=1~7)

Bit	Name	Access	Description	Reset value
[31:11]	Reserved	RO	Reserved	0x0
[10:0]	UEPn_MAX_LEN[10:0]	RW	The maximum length that the endpoint nDMA can be offset.	0xX

Endpoint 0 Receive Length Register (R16_U2EP0_RX_LEN)

Bit	Name	Access	Description	Reset value
[15:7]	Reserved	RO	Reserved	0x0
[6:0]	UEP0_RX_LEN[6:0]	RW	Endpoint 0 received data length.	0xX

Endpoint n Single Reception Length Register (R16_U2EPn_RX_LEN) (n=1~7)

Bit	Name	Access	Description	Reset value
[15:0]	UEPn_RX_LEN[15:0]	RW	Endpoint n single reception data length.	0xX

Endpoint n Total Reception Length Register (R16_U2EPn_R_SIZE) (n=1~7)

Bit	Name	Access	Description	Reset value
[15:0]	UEPn_R_SIZE[15:0]	RW	Total received data length of endpoint n.	0xX

Endpoint 0 Transmit Length Register (R16_U2EP0_T_LEN)

Bit	Name	Access	Description	Reset value
[15:7]	Reserved	RO	Reserved	0x0
[6:0]	UEP0_T_LEN[6:0]	RW	Endpoint 0 transmit data length.	0xX

Endpoint 0 Transmit Control Register (R8_U2EP0_TX_CTRL)

Bit	Name	Access	Description	Reset value
7	RB_UEP_T_DONE	RW0	Endpoint 0 transmits end flag and writes 0 to clear it.	0x0
6	RB_UEP_T_NAK_ACT	RW0	Endpoint 0 transmits NAK end flag, and writes 0 to clear it.	0x0
[5:3]	Reserved	RO	Reserved	0x0
2	RB_UEP_T_TOG_MASK	RW	Expected synchronization trigger bit for transmission of endpoint 0: 0: DATA0; 1: DATA1.	0x0
[1:0]	RB_UEP_T_RES_MAS	RW	Response control of endpoint 0 for	0x0

	K[1:0]		transmitting: 00: Answer NAK or busy; 01: Answer STALL or error; 10: Answer ACK; 11: Reserved.	

Endpoint 0 Receive Control Register (R8_U2EP0_RX_CTRL)

Bit	Name	Access	Description	Reset value
7	RB_UEP_R_DONE	RW0	Endpoint 0 receives the end flag, writes 0 to clear it.	0x0
6	RB_UEP_R_NAK_ACT	RW0	Endpoint 0 receives the NAK end flag, writes 0 to clear it.	0x0
5	RB_UEP_R_NAK_TOG	RO	Endpoint 0 for the received return NAK, packet type: 1: DATA1; 0: DATA0.	0x0
4	RB_UEP_R_TOG_MATCH	RO	The received synchronization trigger bit matches the expected synchronization trigger bit: 1: Synchronization; 0: Out of sync.	0x0
3	RB_UEP_R_SETUP_IS	RO	Whether endpoint 0 receives a SETUP transaction.	0x0
2	RB_UEP_R_TOG_MASK	RW	Receiving expected synchronization trigger bit of endpoint 0: 1: DATA1; 0: DATA0.	0x0
[1:0]	RB_UEP_R_RES_MASK[1:0]	RW	Endpoint 0's response control for reception: 00: Answer NAK or busy; 01: Answer STALL or error; 10: Answer ACK; 11: Reserved.	0x0

Endpoint n Transmit Length Register (R16_U2EPn_T_LEN) (n=1~7)

Bit	Name	Access	Description	Reset value
[15:0]	UEPn_T_LEN[15:0]	RW	Endpoint n transmit data length.	0x0

Endpoint n Transmit Control Register (R8_U2EPn_TX_CTRL) (n=1~7)

Bit	Name	Access	Description	Reset value
7	RB_UEP_T_DONE	RW0	Endpoint n transmits the end flag and writes 0 to clear it.	0x0
6	RB_UEP_T_NAK_AC	RW0	Endpoint n transmits the NAK end flag	0x0

	T		and writes 0 to clear it.	
[5:4]	Reserved	RO	Reserved	0x0
[3:2]	RB_UEP_T_TOG_MASK[1:0]	RW	Expected synchronization trigger bit for transmission of endpoint n: 00: DATA0; 01: DATA1; 10: DATA2; 11: MDATA. *Note: This bit can be configured in manual mode and not in automatic mode.*	0x0
[1:0]	RB_UEP_T_RES_MASK[1:0]	RW	Response control of endpoint n to transmission: 00: Answer NAK or busy; 01: Answer STALL or error; 10: Answer ACK; 11: Reserved.	0x0

Endpoint n Receive Control Register (R8_U2EPn_RX_CTRL) (n=1~7)

Bit	Name	Access	Description	Reset value
7	RB_UEP_R_DONE	RW0	Endpoint n receives the end flag, writes 0 to clear it.	0x0
6	RB_UEP_R_NAK_ACT	RW0	Endpoint n receives the NAK end flag and writes 0 to clear it.	0x0
5	RB_UEP_R_NAK_TOG	RO	Endpoint n for the received return NAK, packet type: 1: DATA1; 0: DATA0.	0x0
4	RB_UEP_R_TOG_MATCH	RO	The synchronization trigger bit received by endpoint n matches the expected synchronization trigger bit: 1: Synchronization. 0: Out of sync;	0x0
[3:2]	RB_UEP_R_TOG_MASK[1:0]	RW	Receiving expected synchronization trigger bit of endpoint n: 00: DATA0; 01: DATA1; 10: DATA2; 11: MDATA。 *Note: This bit can be configured in manual mode and not in automatic mode.*	0x0
[1:0]	RB_UEP_R_RES_MASK[1:0]	RW	Endpoint n's response control for reception: 00: Answer NAK or busy; 01: Answer STALL or error;	0x0

			10: Answer ACK; 11: Reserved.	

USBHS Endpoint Transmit Synchronization Mode Enable Register (R16_U2EP_T_ISO)

Bit	Name	Access	Description	Reset value
[15:8]	Reserved	RO	Reserved	0x0
[7:1]	RB_UEPn_T_ISO_EN[6:0]	RW	The upload endpoint (IN) synchronization mode is enabled.	0x0
0	Reserved	RO	Reserved	0x0

USBHS Endpoint Receive Synchronization Mode Enable Register (R16_U2EP_R_ISO)

Bit	Name	Access	Description	Reset value
[15:8]	Reserved	RO	Reserved	0x0
[7:1]	RB_UEPn_R_ISO_EN [6:0]	RW	The download endpoint (OUT) synchronization mode is enabled.	0x0
0	Reserved	RO	Reserved	0x0

18.2.2 Description of Host Registers

Table 18-2 USB host registers

Name	Access address	Description	Reset value
R8_U2H_CFG	0x40009100	USBHS host configuration register	0x07
R8_U2H_INT_EN	0x40009102	USBHS host interrupt enable register	0x00
R8_U2H_DEV_AD	0x40009103	USBHS host device address register	0x00
R32_U2H_CONTROL	0x40009104	USBHS host control register	0x00XXXXXX
R8_U2H_INT_FLAG	0x40009108	USBHS host interrupt flag register	0x00
R8_U2H_INT_ST	0x40009109	USBHS host interrupt status register	0xXX
R8_U2H_MIS_ST	0x4000910A	USBHS host miscellaneous status register	0xXX
R32_U2H_LPM_DATA	0x4000910C	USBHS host power management data register	0x00000XXX
R32_U2H_SPLIT_DATA	0x40009110	USBHS host SPLIT data register	0x000XXXXX
R32_U2H_FRAME	0x40009114	USBHS host frame register	0x00000000
R32_U2H_TX_LEN	0x40009118	USBHS host transmit length register	0x00000XXX
R32_U2H_RX_LEN	0x4000911C	USBHS host receive length register	0x00000XXX
R32_U2H_RX_MAX_LEN	0x40009120	USBHS host receive maximum length register	0x00000XXX
R32_U2H_RX_DMA	0x40009124	DMA receive address register	0x000XXXXX
R32_U2H_TX_DMA	0x40009128	DMA transmit address register	0x000XXXXX
R32_U2H_PORT_CTRL	0x4000912C	USBHS host port control register	0x0000X000
R8_U2H_PORT_CFG	0x40009130	USBHS host port configuration register	0x00
R8_U2H_PORT_INT_EN	0x40009132	USBHS host port interrupt enable register	0x00
R8_U2H_PORT_TEST_CT	0x40009133	USBHS host port test mode register	0x00
R16_U2H_PORT_ST	0x40009134	USBHS host port status register	0x0010

R8_U2H_PORT_CHG	0x40009136	USBHS host port status change register	0x00
R32_U2H_BC_CTRL	0x4000913C	USBHS host BC charge control register	0x00000000
R8_USBHS_PLL_CTRL	0x40009200	USBHS PLL clock control register	0x00

USBHS Host Configuration Register (R8_U2H_CFG)

Bit	Name	Access	Description	Reset value
7	RB_UH_LPM_EN	RW	LPM enable.	0x0
6	RB_UH_FORCE_FS	RW	Force to use USB_FS.	0x0
5	RB_UH_SOF_EN	RW	Enable SOF packet transmission.	0x0
4	RB_UH_DMA_EN	RW	Enable DMA transmission.	0x0
3	RB_UH_PHY_SUSPENDM	RW	PHY suspends.	0x0
2	RB_UH_CLR_ALL	RW	Clear the interrupt flag and FIFO, requires software clearing.	0x1
1	RB_UH_RST_SIE	RW	USB protocol processor reset, requires software clearing.	0x1
0	RB_UH_RST_LINK	RW	USB link control module reset.	0x1

USBHS Host Interrupt Enable Register (R8_U2H_INT_EN)

Bit	Name	Access	Description	Reset value
7	RB_UHIE_FIFO_OVER	RW	FIFO overflow interrupt enabled.	0x0
6	RB_UHIE_TX_HALT	RW	Transmit halt interrupt enabled.	0x0
5	RB_UHIE_SOF_ACT	RW	SOF packet transmission interrupt is enabled.	0x0
4	RB_UHIE_TRANSFER	RW	USB end or transmission completion interrupt is enabled.	0x0
3	RB_UHIE_RESUME_ACT	RW	Bus recovery interrupt enabled.	0x0
2	RB_UHIE_WKUP_ACT	RW	Wake-up interrupt enabled.	0x0
[1:0]	Reserved	RO	Reserved	0x0

USBHS Host Device Address Register (R8_U2H_DEV_AD)

Bit	Name	Access	Description	Reset value
7	Reserved	RO	Reserved	0x0
[6:0]	RB_UH_DEV_AD DR[6:0]	RW	The address of the currently operating USB device.	0x0

USBHS Host Control Register (R32_U2H_CONTROL)

Bit	Name	Access	Description	Reset value
[31:24]	Reserved	RO	Reserved	0x0
23	RB_UH_RX_NO_R ES	RW	IN-DATA has no answer, which is used for synchronous transmission or high-speed SPLIT packets.	0xX
22	RB_UH_TX_NO_R ES	RW	OUT/SETUP–DATA does not expect a reply, which is used for synchronous	0xX

			transmission or high-speed SPLIT packets.	
21	RB_UH_RX_NO_DATA	RW	Unexpected data packet after IN token packet, used for high-speed SPLIT packet.	0xX
20	RB_UH_TX_NO_DATA	RW	There is no data packet after the OUT/SETUP token packet, which is used for high-speed SPLIT packets.	0xX
19	RB_UH_PRE_PID_EN	RW	Low-speed preamble package PREPID enable bit, which needs to be turned on when the port works at full speed and needs to send low-speed packet (PRE). 1: Enabled, used to communicate with low-speed USB devices through external full-speed HUB; 0: Disable low-speed preamble packets.	0xX
18	RB_UH_SPLIT_VALID	RW	Transmit SPLIT packet is valid.	0xX
17	RB_UH_LPM_VALID	RW	Transmit LPM packet is valid.	0xX
16	RB_UH_HOST_ACTION	RW	HOST performs transaction enabling, and this bit is cleared automatically after the transaction is completed.	0x0
[15:11]	Reserved	RO	Reserved	0x0
10	RB_UH_BUF_MODE	RW	Data buffer control bit. 1: R32_U2H_RX_DMA is used for transmission and R32 _ U2h _ TX _ DMA is used for reception; 0: R32_U2H_TX_DMA is used for transmission and R32_U2H_RX_DMA is used for reception.	0x0
[9:8]	RB_UH_T_TOG_MASK [1:0]	RW	Transmit data PID: 00: PID_DATA0; 01: PID_DATA1; 10: PID_DATA2; 11: PID_MDATA.	0xX
[7:4]	RB_UH_T_ENDP_MASK [3:0]	RW	The endpoint number of the transaction token packet transmitted by the host.	0xX
[3:0]	RB_UH_T_TOKEN_MASK [3:0]	RW	The transaction token package PID transmitted by the host.	0xX

USBHS Host Interrupt Flag Register (R8_U2H_INT_FLAG)

Bit	Name	Access	Description	Reset value
7	RB_UHIF_FIFO_OVER	RW1Z	FIFO overflow interrupt flag.	0x0
6	RB_UHIF_TX_HALT	RW1Z	The transmission stop interrupt flag is	0x0

			used in the host mode for reading data overflow during downloading, or when the transmission is not finished at the time point of EOF2, the transmission is stopped, and the write 1 is cleared.	
5	RB_UHIF_SOF_ACT	RW1Z	SOF packet transmission completion interrupt flag, write 1 to clear.	0x0
4	RB_UHIF_TRANSFER	RW1Z	USB transaction transmission complete interrupt flag, write 1 to clear.	0x0
3	Reserved	RO	Reserved	0x0
2	RB_UHIF_WKUP_ACT	RW1Z	Wake-up interrupt flag, write 1 to clear.	0x0
[1:0]	Reserved	RO	Reserved	0x0

USBHS Host Interrupt Status Register (R8_U2H_INT_ST)

Bit	Name	Access	Description	Reset value
[7:5]	Reserved	RO	Reserved	0xX
4	RB_UHIS_PORT_RX_RESUME	RW	A bit of 1 indicates that the port has received a wake-up signal.	0xX
[3:0]	RB_UH_R_TOKEN_MASK [3:0]	RO	The host received PID.	0xX

USBHS Host Miscellaneous Status Register (R8_U2H_MIS_ST)

Bit	Name	Access	Description	Reset value
7	RB_UHMS_BUS_SE0	RO	SEO on USB bus.	0xX
6	RB_UHMS_BUS_J	RW	J on USB bus.	0xX
[5:4]	RB_UHMS_LINESTATE[1:0]	RO	The Linestate signal of the PHY.	0xX
3	RB_UHMS_USB_WAKEUP	RW	USB bus wake-up status: 1: Bus wakeup in progress; 0: Bus wakeup not in progress.	0xX
2	RB_UHMS_SOF_ACT	RW	USB bus SOF packet transmission status bits: 1: SOF packet being sent; 0: sending complete or idle.	0xX
1	RB_UHMS_SOF_PRE	RO	The SOF package of USB bus indicates that the status is: 1: SOF packet will be transmitted; 0: No SOF packet is transmitted.	0xX
0	RB_UHMS_SOF_FREE	RO	Port enable state: 1: Port enabled; 0: Port not enabled.	0xX

USBHS Host Power Management Data Register (R32_U2H_LPM_DATA)

Bit	Name	Access	Description	Reset value
[31:11]	Reserved	RO	Reserved	0x0
[10:0]	RB_UH_LPM_DATA[10:0]	RW	Link power management packet data content	0xX

USBHS Host SPLIT Data Register (R32_U2H_SPLIT_DATA)

Bit	Name	Access	Description	Reset value
[31:19]	Reserved	RO	Reserved	0x0
[18:0]	RB_UH_SPLIT_DATA [18:0]	RW	The data contents of the SPLIT packet sent by the host endpoint are, in descending order, ET, E, S, Port, SC, and Hub Addr.	0xX

USBHS Host Frame Register (R32_U2H_FRAME)

Bit	Name	Access	Description	Reset value
[31:26]	Reserved	RO	Reserved	0x0
25	RB_UH_SOF_CNT_CLR	RW	The SOF count is cleared.	0x0
24	RB_UH_SOF_CNT_EN	RW	SOF count is enabled.	0x0
[23:19]	Reserved	RO	Reserved	0x0
[18:16]	RB_UH_MFRAME_NO[2:0]	RO	The micro frame number of the SOF package about to be transmitted.	0x0
[15:11]	Reserved	RO	Reserved	0x0
[10:0]	RB_UH_FRAME_NO[10:0]	RW	The frame number of the SOF package about to be transmitted.	0x0

USBHS Host Transmit Length Register (R32_U2H_TX_LEN)

Bit	Name	Access	Description	Reset value
[31:11]	Reserved	RO	Reserved	0x0
[10:0]	RB_UH_TX_LEN[10:0]	RW	Transmit data length.	0xX

USBHS Host Receive Length Register (R32_U2H_RX_LEN)

Bit	Name	Access	Description	Reset value
[31:11]	Reserved	RO	Reserved	0x0
[10:0]	RB_UH_RX_LEN[10:0]	RW	Receive data length.	0xX

USBHS Host Receive Maximum Length Register (R32_U2H_RX_MAX_LEN)

Bit	Name	Access	Description	Reset value
[31:11]	Reserved	RO	Reserved	0x0
[10:0]	RB_UH_RX_MAX_LEN[10:0]	RW	Maximum length of reception.	0xX

DMA Receive Address Register (R32_U2H_RX_DMA)

Bit	Name	Access	Description	Reset value
[31:17]	Reserved	RO	Reserved	0x0
[16:0]	R32_UH_RX_DMA[16:0]	RW	Receiving address, the lower two digits are invalid, and 4 bytes alignment is required.	0xX

DMA Transmit Address Register (R32_U2H_TX_DMA)

Bit	Name	Access	Description	Reset value
[31:17]	Reserved	RO	Reserved	0x0
[16:0]	R32_UH_TX_DMA[16:0]	RW	Transmitting address, the lower two digits are invalid, and 4 bytes alignment is required.	0xX

USBHS Host Port Control Register (R32_U2H_PORT_CTRL)

Bit	Name	Access	Description	Reset value
[31:17]	Reserved	RO	Reserved	0x0
16	RB_UH_BUS_RST_LONG	RW	Bus reset time selection: 0: 16ms; 1: 18ms.	0x0
[15:12]	RB_UH_PORT_SLEEP_BESL [3:0]	RW	Awakening time control: 0: 125us; 8: 3ms; 1: 150us; 9: 4ms; 2: 200us; A: 5ms; 3: 300us; B: 6ms; 4: 400us; C: 7ms; 5: 500us; D: 8ms; 6: 1ms; E: 9ms; 7: 2ms; F: 10ms.	0xX
[11:9]	Reserved	RO	Reserved	0x0
8	RB_UH_CLR_PORT_SLEEP	WO	PORT exits SLEEP status (LPM).	0x0
[7:6]	Reserved	RO	Reserved	0x0
5	RB_UH_CLR_PORT_CONNECT	WO	Put the port into the port state.。	0x0
4	RB_UH_CLR_PORT_EN	WO	PORT exits the enabled state and enters the DISABLED state.	0x0
3	RB_UH_SET_PORT_SLEEP	WO	PORT enters SLEEP status (LPM).	0x0
2	RB_UH_CLR_PORT_SUSP	WO	PORT exits the suspended state.	0x0
1	RB_UH_SET_PORT_SUSP	WO	PORT enters a suspended state.	0x0
0	RB_UH_SET_PORT_RES	WO	Port transmits reset.	0x0

	ET			

USBHS Host Port Configuration Register (R8_U2H_PORT_CFG)

Bit	Name	Access	Description	Reset value
7	RB_UH_PD_EN	RW	15K resistor pull-down is enabled in host mode.	0x0
[6:1]	Reserved	RO	Reserved	0x0
0	RB_UH_HOST_EN	RW	USB port mode selection: 1: Port is in host mode; 0: Port is in device mode.	0x0

USBHS Host Port Interrupt Enable Register (R8_U2H_PORT_INT_EN)

Bit	Name	Access	Description	Reset value
[7:6]	Reserved	RO	Reserved	0x0
5	RB_UHIE_PORT_SLP	RW	Port sleep state change interrupt enabled.	0x0
4	RB_UHIE_PORT_RESET	RW	Port reset state change interrupt enabled.	0x0
3	Reserved	RO	Reserved	0x0
2	RB_UHIE_PORT_SUSP	RW	Port suspended state change interrupt enabled.	0x0
1	RB_UHIE_PORT_EN	RW	Port enable state change interrupt enabled.	0x0
0	RB_UHIE_PORT_CONNECT	RW	Port connection state change interrupt enabled.	0x0

USBHS Host Port Test Mode Register (R8_U2H_PORT_TEST_CT)

Bit	Name	Access	Description	Reset value
[7:3]	Reserved	RO	Reserved	0x0
2	RB_UH_TEST_FORCE_EN	RW	Test mode enable.	0x0
1	RB_UH_TEST_K	RW	Test output K.	0x0
0	RB_UH_TEST_J	RW	Test output J.	0x0

USBHS Host Port Status Register (R16_U2H_PORT_ST)

Bit	Name	Access	Description	Reset value
[15:12]	Reserved	RO	Reserved	0x0
11	RB_UHIS_PORT_TEST	RO	Whether the port is in test mode.	0x0
10	RB_UHIS_PORT_HS	RO	Whether the port connection speed is high.	0x0
9	RB_UHIS_PORT_LS	RO	Whether the port connection speed is low.	0
[8:6]	Reserved	RO	Reserved	0x0
5	RB_UHIS_PORT_SLP	RO	Port sleep.	0x0
4	RB_UHIS_PORT_RS	RO	Port reset status.	0x1

	T			
3	Reserved	RO	Reserved	0x0
2	RB_UHIS_PORT_SUSP	RO	Port suspended state.	0x0
1	RB_UHIS_PORT_EN	RO	Port enable	0x0
0	RB_UHIS_PORT_CONNECT	RO	Port connection status.	0x0

USBHS Host Port Status Change Register (R8_U2H_PORT_CHG)

Bit	Name	Access	Description	Reset value
[7:6]	Reserved	RO	Reserved	0x0
5	RB_UHIF_PORT_SLP	RW1Z	Port sleep state changes, write 1 to clear.	0x0
4	RB_UHIF_PORT_RESET	RW1Z	Port reset state changes, write 1 to clear.	0x0
3	Reserved	RO	Reserved	0x0
2	RB_UHIF_PORT_SUSP	RW1Z	Port suspended state changes, write 1 to clear.	0x0
1	RB_UHIF_PORT_EN	RW1Z	Port enable state changes, write 1 to clear.	0x0
0	RB_UHIF_PORT_CONNECT	RW1Z	Port connection status changes, write 1 to clear.	0x0

USBHS Host BC Charge Control Register (R32_U2H_BC_CTRL)

Bit	Name	Access	Description	Reset value
[31:11]	Reserved	RO	Reserved	0x0
10	RB_UDM_VSRC_ACT	RO	In automatic mode, this bit indicates that UDM outputs V_{BC_SRC}, otherwise it is controlled by UDM_BC_CMPE. *Note: This bit is 1 when UDP is higher than VBC_SRC but UDP is not high, otherwise it is 0.*	0x0
9	RB_UDM_BC_VSRC	RW	UDM pin BC protocol source voltage enable: 1: UDM pin outputs BC protocol source voltage V_{BC_SRC}; 0: Prohibit output.	0x0
8	RB_UDP_BC_VSRC	RW	UDP pin BC protocol source voltage enable: 1: UDP pin outputs BC protocol source voltage V_{BC_SRC}; 0: Prohibit output.	0x0
7	Reserved	RO	Reserved	0x0
6	RB_BC_AUTO_MODE	RW	Auto mode enabled: 1: Enable; 0: Disable.	0x0
5	RB_UDM_BC_C	RW	UDM pin BC protocol comparator enabled:	0x0

	MPE		1: Enable; 0: Disable.	
4	RB_UDP_BC_CMPE	RW	UDP pin BC protocol comparator enabled: 1: Enable; 0: Disable.	0x0
[3:2]	Reserved	RO	Reserved	0x0
1	RB_UDM_BC_CMPO	RO	UDM pin BC protocol comparator status: 1: UDM pin voltage is higher than BC protocol reference value V_{BC_REF}; 0: UDM pin voltage is lower than BC protocol reference value V_{BC_REF}.	0x0
0	RB_UDP_BC_CMPO	RO	UDP pin BC protocol comparator status: 1: UDP pin voltage is higher than BC protocol reference value VBC_REF; 0: UDP pin voltage is lower than BC protocol reference value VBC_REF.	0x0

USBHS PLL Clock Control Register (R8_USBHS_PLL_CTRL)

Bit	Name	Access	Description	Reset value
[7:3]	Reserved	RO	Reserved	0x0
2	RB_USBHS_PLL_EN	RW	USBHS PLL enable	0x0
1	RB_USBHS_PLL_LOWPWR	RW	USBHSPLL low-power consumption mode (It can only be enabled when USBHS is applied to fixed low full speed, but not when it is not fixed low full speed). 1: Turn on low-power consumption and reduce current by about 0.3mA; 0: Do not turn on low power consumption.	0x0
0	RB_USBHS_PLL_CKSEL	RW	USBHS internal reference clock source selection 1: Keep 32M without dividing by 2; 0: Generate 16M by dividing by 2.	0x0

Chapter 19 Wireless Communication

19.1 Introduction

The chip integrates low-power 2.4-GHz wireless communication modules, including RF transceiver, baseband, link control and antenna matching network. Bluetooth Low Energy (BLE) is supported. More than 100 registers are provided internally to adjust parameters, control process and status. This datasheet does not provide a detailed description of registers. The underlying operations of wireless communication mainly provide application support with subroutine libraries.

Main features:

- Integrated with 2.4GHz RF transceiver, BaseBand and LLE link control.
- Support Bluetooth Low Energy (BLE), compatible with Bluetooth Low Energy 5.4 specification.
- Single-ended RF interface and simplified board design.
- Support 2Mbps, 1Mbps.
- Support the highest 8KHz reporting rate in 2.4G mode.
- -95dBm@1Mbps, -93dBm@2Mbps RX sensitivity.
- Programmable TX power from -20dBm to +4.5dBm, and dynamic adjustment is supported.
- Support AES-128 hardware encryption/decryption.
- Support DMA.
- Optimized protocol stack and application layer API, and support networking.

19.2 LLE Module

LLE module supports automatic sending and receiving mode and manual sending and receiving mode. 5 groups of independent hardware timers can control the time point of sending and receiving data in any one process.

19.3 DMA Module

The controller has 1 group of DMAs, 2 channels. 2 channels of DMAs are used for transmitting data and receiving data respectively in auto transmit mode, the address of the transmit DMA and the address of the receive DMA can be configured at the same time, so that no further configuration is required during the frame interval.

19.4 BB Module

19.5 AES Module

Please conduct specific applications based on BLE protocol stack library and refer to the BLE application examples provided.

Chapter 20 Near Field Communication (NFC) Wireless Interface

20.1 Introduction to NFC

The chip provides a near-field communication wireless interface that contains a transceiver and an ISO14443-A compatible wireless decoding baseband that supports both card reader (PCD) mode and card (PICC) mode. The registers are not described in detail in this manual, and the underlying operation of wireless communication is mainly supported by a subroutine library to provide application support.

Main features:

- Support ASK (Amplitude Shift Keying) modulation and NRZ (Non-Return-to-Zero) encoding.
- PCD mode supports 106 kbit/s data baud rate in ISO14443-A protocol
- PCD mode supports reading and writing operations on ISO14443-A class cards
- PCD mode supports anti-collision: if multiple cards enter the RF field at the same time, the reader executes an anti-collision algorithm to recognize each card.
- PICC mode supports emulation of ISO14443-A class cards for data read and write operations
- PICC mode supports NDEF data interaction function, supports intelligent linkage with cell phones and other devices: e-card, Bluetooth OOB pairing
- Provide optimized protocol stack and application layer API.
- Provide hardware-accelerated encryption and decryption algorithm Crypto1 for M1 type cards

Chapter 21 LED Screen Controller

21.1 Introduction to LED Screen Controller

The chip provides LED screen control card interface, with two 4-byte FIFO built in, which supports DMA and interrupt, saves CPU processing time and supports 1/2/4/8 data line interfaces.

21.2 Register Description

Table 21-1 LED registers

Name	Access address	Description	Reset value
R8_LED_CTRL_MOD	0x4000F000	LED mode configuration register	0x00
R8_LED_CLOCK_DIV	0x4000F001	LED serial clock frequency division register	0x10
R8_LED_CTRL_MOD1	0x4000F002	LED mode configuration register 1	0x00
R16_LED_STATUS	0x4000F004	LED status register	0x00A0
R32_LED_FIFO	0x4000F008	LED data FIFO register	0xXXXXXXXX
R16_LED_DMA_LEN	0x4000F010	LED DMA transmit length	0x0XXX
R16_LED_DMA_CNT	0x4000F014	LED DMA residual count register	0x0000
R32_LED_DMA_BEG	0x4000F018	LED DMA start address	0x000XXXXX
R32_LED_DMA_CUR	0x4000F01C	LED DMA current address	0x000XXXXX

USB Mode Configuration Register (R8_LED_CTRL_MOD)

Bit	Name	Access	Description	Reset value
[7:6]	RB_LED_CHAN_MOD	RW	LED channel mode selection: 00: LED0, single channel output; 01: LED0/1, dual channel output; 10: LED0~3, 4 channel output; 11: LED0~7, 8 channel output.	0
5	RB_LED_IE_FIFO	RW	FIFO count over-half interrupt enable: 1: FIFO count <=2 interrupt trigger; 0: Disable interrupt.	0
4	RB_LED_DMA_EN	RW	LED DMA function and DMA interrupt enable: 1: Enable; 0: Disable.	0
3	RB_LED_OUT_EN	RW	LED signal output enable: 1: Enable; 0: Disable.	0
2	RB_LED_OUT_POLAR	RW	LED data output polarity control bit: 1: Inverted, data 0 outputs 1, data 1 outputs 0; 0: Pass-through, data 0 outputs 0, data 1 outputs 1.	0
1	RB_LED_ALL_CLEAR	RW	FIFO/ counter/interrupt flag of LED is cleared: 1: Forced clear and zero; 0: No clearing.	0

0	RB_LED_BIT_ORDER	RW	LED serial data sequence selection: 1: Low in front; 0: High in front.	0

USB Serial Clock Frequency Division Register (R8_LED_CLOCK_DIV)

Bit	Name	Access	Description	Reset value
[7:0]	R8_LED_CLOCK_DIV	RW	LED output clock frequency division LED frequency = Fsys / R8_LED_CLOCK_DIV.	10h

USB Mode Configuration Register 1 (R8_LED_CTRL_MOD1)

Bit	Name	Access	Description	Reset value
[7:2]	Reserved	RO	Reserved	0
1	RB_IE_SEND_END	RW	DMA all data transfer end interrupt enable: 1: Enable; 0: Disable.	0
0	R8_LED_DMA_LOOP	RW	LED DMA data recycling enable: 1: Enable; 0: Disable.	0

LED Status Register (R16_LED_STATUS)

Bit	Name	Access	Description	Reset value
[15:10]	Reserved	RO	Reserved	0
9	RB_LED_IF_DMA_INT	RW1Z	DMA transfer end interrupt flag bit 1: Transfer end; 0: Transfer is not end.	0
8	RB_LED_IF_DMA_END	RW1Z	DMA completed flag bit, write 1 to clear or write R16_LED_DMA_CNT to clear: 1: Completed; 0: Not completed.	0
7	RB_LED_LOAD_FAIL	RO	Load data result: 1: FIFO empty; 0: Data in FIFO.	1
6	RB_LED_IF_FIFO	RW1Z	FIFO count over-half interrupt flag bit, write 1 to clear or write R16_LED_FIFO to clear: 1: FIFO count ≤ 2; 0: FIFO count > 2.	0
5	RB_LED_CLOCK	RO	Current LED clock signal level status: 1: High level; 0: Low level.	1
4	Reserved	RO	Reserved	0
[3:0]	RB_LED_FIFO_COUNT	RO	Byte count value in current FIFO, must be even.	0

LED Data FIFO Register (R32_LED_FIFO)

Bit	Name	Access	Description	Reset value
[31:0]	R32_LED_FIFO	WO	LED data FIFO entry, 32-bit writing.	XXXXXXXXh

LED DMA Transmit Length Register (R16_LED_DMA_LEN)

Bit	Name	Access	Description	Reset value
[15:12]	RESERVED	RO	Reserved	0
[11:0]	R16_LED_DMA_LENGTH	WO	DMA transmit count length.	XXXh

LED DMA Residual Count Register (R16_LED_DMA_LEN)

Bit	Name	Access	Description	Reset value
[15:12]	Reserved	RO	Reserved	0
[11:0]	RB_LED_DMA_CNT	RO	The number of remaining DMA words (16 bits) in the main buffer of LED_DMA_MAIN is automatically decremented after DMA is started, and only the lower 12 bits are valid. Does not include the auxiliary buffer.	0

LED DMA Begin Register (R32_LED_DMA_BEG)

Bit	Name	Access	Description	Reset value
[31:17]	Reserved	RO	Reserved	0
[16:2]	RB_LED_DMA_BEG	RW	DMA begin address	XXXXh
[1:0]	Reserved	RO	Reserved	0

LED DMA Current Register (R32_LED_DMA_CUR)

Bit	Name	Access	Description	Reset value
[31:17]	Reserved	RO	Reserved	0
[16:2]	RB_LED_DMA_CUR	RO	DMA current address	XXXXh
[1:0]	Reserved	RO	Reserved	0

21.3 LED Configuration

(1) Set R8_LED_CLOCK_DIV to select the LED output clock frequency;

(2) Set R16_LED_DMA_BEG to point to the start address of the ready output data;

(3) Set R8_LED_CTRL_MOD to select the channel mode, output polarity, bit order, enable interrupt and DMA function, etc.;

(4) Set the direction of LEDC and necessary LED0 to LED7 pins to output, and optionally, set the drive capability of the corresponding I/O;

(5) Set the DMA counter register R16_LED_DMA_CNT to start DMA transmitting, or transmit data by writing FIFO.

Chapter 22 Parameters

22.1 Absolute Maximum Ratings

(Critical or exceeding the absolute maximum value will probably cause the chip to work improperly or even be damaged)

Table 22-1 Absolute maximum ratings

Name	Parameter description	Min.	Max.	Unit
TA	Ambient temperature during operation	-40	85	℃
TS	Ambient temperature during storage	-40	125	℃
VDD33	System supply voltage (VDD33 connects to power, GND connects to ground)	-0.4	4.0	V
VIO33	I/O supply voltage (VIO33 connects to power, GND connects to ground)	-0.4	4.0	V
VIO	Voltage on input/output pins	-0.4	VIO33+0.4	V
VIO5	Voltage on input/output pins that support 5V withstand voltage	-0.4	5.5	V
VDCI	Voltage on VDCID/VDCIA pin (if external DC-DC is used)	-0.4	VDD33+0.4	V
VXCK	Voltage on PA10/PA11 after X32MI/X32MO/ enabling LSE	-0.3	1.4	V

22.2 Electrical Characteristics

Test conditions: TA=25℃, VDD33=VIO33=3.3V, Fsys=16MHz。

Table 22-2 Electrical characteristics

Name	Parameter description			Min.	Typ.	Max.	Unit
VDD33	System supply voltage @VDD33			1.75	3.3	3.6	V
VIO33	I/O supply voltage @VIO33			1.75	3.3	3.6	V
ICC_8	Straight-through static supply current Condition: codes run in RAM or FLASH	HIS system frequency Fsys=8M	RAM		2.2		mA
			FLASH		2.5		mA
ICC_{16}		HSE system frequency Fsys=16M	RAM		3		mA
			FLASH		3.5		mA
ICC_{48}		HSE-PLL system frequency Fsys=78M	RAM		9		mA
			FLASH		10.5		mA
$IDDC_8$	Static supply current after DC-DC is enabled Condition: codes run	HSI system frequency Fsys=8M	RAM		1.3		mA
			FLASH		1.9		mA
$IDDC_{16}$		HSE system	RAM		1.7		mA

	in RAM or FLASH	frequency Fsys=16M	FLASH		2.7		mA
$IDDC_{48}$		HSE-PLL system frequency Fsys=78M	RAM		4		mA
			FLASH		8.9		mA
VIL	GPIO low level input voltage			0		0.9	V
VIH	GPIO high level input voltage			2.0		VIO33	V
VIL5	GPIO that supports 5V tolerant voltage low level input voltage			0		0.9	V
VIH5	GPIO that supports 5V tolerant voltage high level input voltage			2.0		5.0	V
VOL	Output low level voltage (5mA/20mA input current)			0	0.3	0.4	V
VOH	Output high level voltage (5mA/20mA output current)			VIO33-0.4	VIO33-0.3	VIO33	V
IIN	Input current of GPIO floating input			-3	0	3	uA
IUP	Input current of GPIO with built-in pull-up resistor			25	60	90	uA
IDN	Input current of GPIO with built-in pull-down resistor			-90	-60	25	uA
Vref	Voltage on VINTA pin (ADC reference voltage)			1.035	1.05	1.065	V
Vdci	Voltage on VDCID pin after DC-DC is enabled			1.18	1.3	1.38	V
Vlvr	LVR Low-voltage reset threshold			1.3	1.5	1.75	V

22.3 Power Consumption in Low-power Modes

Test conditions: TA=25°C, VDD33=VIO33=3.3V, Fsys=16MHz.

Table 22-3 Low power parameters (for reference only, related to temperature)

Low-power mode	Min.	Typ.	Max.	Unit
Idle mode, enable the clock combination of each module		1.26		mA
Halt mode, disable all clocks		200		uA
Sleep mode, multiple combinations, refer to Table 5-3		2.6~8.2		uA
Sleep mode, PMU+core+RAM2K, GPIO wakes up, no RTC		2.6		uA
Shutdown mode, several combinations, refer to Table 5-3		0.65~5.5		uA
Shutdown mode, only PMU, reset after GPIO wakes up, no RTC		0.65		uA

Table 22-4 Current on modules (for reference only, related to temperature)

Name	Parameter description	Min.	Typ.	Max.	Unit
$I_{DD(RAM32K)}$	RAM32K: 32KB SRAM		1.5		uA
$I_{DD(RAM96K)}$	RAM96K: 96KB SRAM		4.5		uA
$I_{DD(LSI)}$	Internal LSI oscillator		0.5		uA
$I_{DD(LSE)}$	External LSE oscillator		0.4		uA

$I_{DD(HSI)}$	Internal HSI oscillator				120		uA
$I_{DD(HSE)}$	External HSE oscillator				220		uA
$I_{DD(BM)}$	Low-power battery low-voltage monitor module (BM)				1		uA
$I_{DD(BD)}$	High-precision battery low-voltage detector module (BD)				85		uA
$I_{DD(PLL)}$	Internal PLL oscillator				150		uA
$I_{DD(ADC)}$	ADC module				400		uA
$I_{DD(TKEY)}$	Touch-Key module				100		uA
	Charge migration module				30		uA
	Drive shield module				350		uA
$I_{DD(TS)}$	Temperature sensor module (TS)				100		uA
$I_{DD(LCD)}$	LCD module (Refer to Table 5-3 for temperature-related instructions)				2		uA
$I_{DD(USBFS)}$	USBFS module		Transmit status		2		mA
$I_{DD(USBHS)}$	USBHS module		Transmit status		15		mA
$I_{DD(NFC)}$	NFC module		Card reader receive mode		25.5(1)		mA
			Card reader transmit mode		25(1)		mA
			Card mode		1.5		mA
$I_{DD(BLE)}$	BLE	Receive	Direct power supply		5.8		mA
			Enable DC-DC	Fsys=78M	3.0		mA
		-20dBm Transmission power	Direct power supply		3.0		mA
			Enable DC-DC	Fsys=78M	1.5		mA
		0dBm Transmission power	Direct power supply		7.8		mA
			Enable DC-DC	Fsys=78M	3.8		mA
		+4.5dBm Transmission power	Direct power supply		15.0		mA
			Enable DC-DC	Fsys=78M	7.2		mA

Note: 1. Relevant current parameters are related to antenna and matching network.

22.4 Clock Source

Table 22-5 High-speed oscillator (HSE)

Symbol	Parameter description		Min.	Typ.	Max.	Unit
F_{HSI}	Internal HSI oscillator frequency			16		MHz
A_{HSI}	Accuracy of HSI oscillator	TA = -40°C~85°C		±1		%
T_{SUHSI}	Internal HSI oscillator starts to available time.				1	us
F_{HSE}	External HSE oscillator frequency			32		MHz
T_{SUHSE}	External HSE oscillator startup to available		80	200	500	us

	time				
T_{STHSE}	External HSE oscillator startup to stabilization time	200	500	3000	us

Table 22-6 Low-speed oscillator (LSI and LSE)

Symbol	Parameter description			Min.	Typ.	Max.	Unit
F_{LSIR}	Internal LSI oscillator frequency (before calibration)			20K	32K	48K	Hz
F_{LSI}	Internal LSI frequency (after application software runtime calibration)			32726	32768	32810	Hz
A_{LSI}	LSI oscillator accuracy (after software calibration)	Fast calibration			1000		ppm
		High precision calibration(1)	TA = -40°C~85°C		600		ppm
			TA = -20°C~60°C		300		ppm
T_{SULSI}	Internal LSI oscillator startup to stabilization time				40	100	uS
T_{SULSE}	External LSE oscillator startup to available time			100	300	1500	mS
T_{STLSE}	External LSE oscillator startup to stabilization time			500	1500	5000	mS

Note: 1. The temperature change shall not exceed ±1°C.

Table 22-7 PLL characteristics

Symbol	Parameter description	Min.	Typ.	Max.	Unit
F_{PLL}	Output clock after PLL (CK16M * 39)		624		MHz
T_{PLLLK}	PLL lock time		20	40	us

22.5 Timing Parameters

(Test conditions: TA=25°C, VDD33=VIO33=3.3V, Fsys=5.33MHz)

Table 22-8 Timing parameters

Symbol	Parameter description		Min.	Typ.	Max.	Unit
T_{rpor}	Reset delay after RPOR		11.5	15.5	19	ms
T_{rst}	RST# valid signal width			0.1		us
T_{mr}	Reset delay after MR		2	8	18	us
T_{sr}	Reset delay after SR		2	8	18	us
T_{wtr}	Reset delay after WTR		10	12	18	us
T_{WAK}	Wakeup time to exit from low-power status	Idle Mode	0.6	1	3	us
		Halt Mode	T_{SUHSI}+1	T_{SUHSI}+80	T_{SUHSI}+150	us
		Sleep Mode	T_{SUHSI}+1	T_{SUHSI}+300	T_{SUHSI}+400	us
		Shutdown Mode	T_{SUHSI}+0.4	T_{SUHSI}+1	T_{SUHSI}+5	ms

Note: The delay parameters in the table are all based on multiples of Tsys, and the delay will be increased when the clock frequency is reduced.

The delay parameters in the table are based on using an internal HSE clock source. If an external HSE clock source is used during sleep, the delay parameter T_{WAK} in Halt mode/Sleep mode/Shutdown mode in the table will be increased by about 0.2~1mS (activated to available T_{SUHSI}).

22.6 Other Parameters

(Test conditions: TA=25℃, VDD33=VIO33=3.3V, Fsys=16MHz)

Table 22-9 Other parameters

Symbol	Parameter description		Min.	Typ.	Max.	Unit
R_{TS}	Measurement range of temperature sensor		-40		85	℃
A_{TSC}	Measurement error of temperature sensor after calibrated by software			±10		℃
T_{FRER}	Single sector erase operation time of Flash-ROM		6	16	30	mS
T_{FRPG}	Single word program operation time of Flash-ROM		1	2	4	mS
N_{EPCE}	Erase/program cycle endurance	5~45°C	100K	1000K (Random test)		times
		-40~85°C	50K	200K (Random test)		
T_{DR}	Data hold capability of Flash-ROM		20			years
V_{ESD}	ESD tolerant voltage on I/O input or output pins	Antenna (ANT)	2K	4K (Random test)		V
		I/O pins: PA and PB	4K	6K (Random test)		V

Chapter 23 Package

Chip Package

Package Form	Body Size	Pin Pitch		Package Description	Order Model
QFN48	5*5mm	0.35mm	13.8mil	Quad Flat No-lead Package	CH585M
QFN32	4*4mm	0.4mm	15.7mil	Quad Flat No-lead Package	CH585F
QFN26C3	3*3mm	0.4mm	15.7mil	Quad Flat No-lead Package	CH585C
QFN20	3*3mm	0.4mm	15.7mil	Quad Flat No-lead Package	CH585D
QFN48	5*5mm	0.35mm	13.8mil	Quad Flat No-lead Package	CH584M
QFN48	5*5mm	0.35mm	13.8mil	Quad Flat No-lead Package	CH584X
QFN32	4*4mm	0.4mm	15.7mil	Quad Flat No-lead Package	CH584F

Note: All dimensions are in millimeters. The pin center spacing values are nominal values, and the error of other dimensions is not more than ±0.2mm.

QFN48

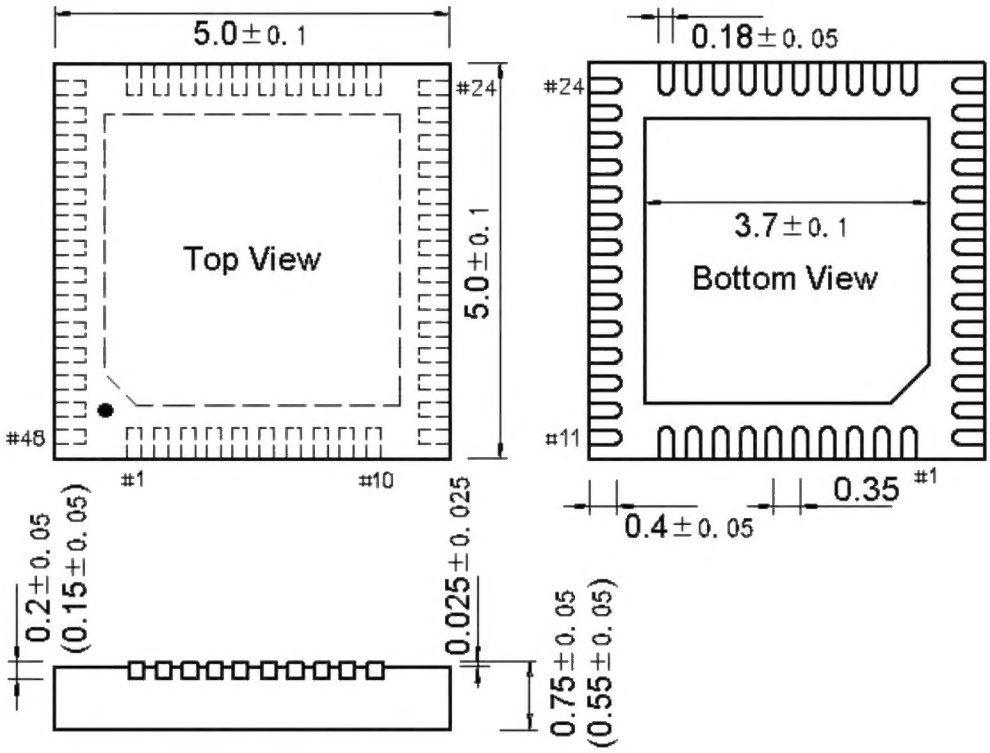

QFN32

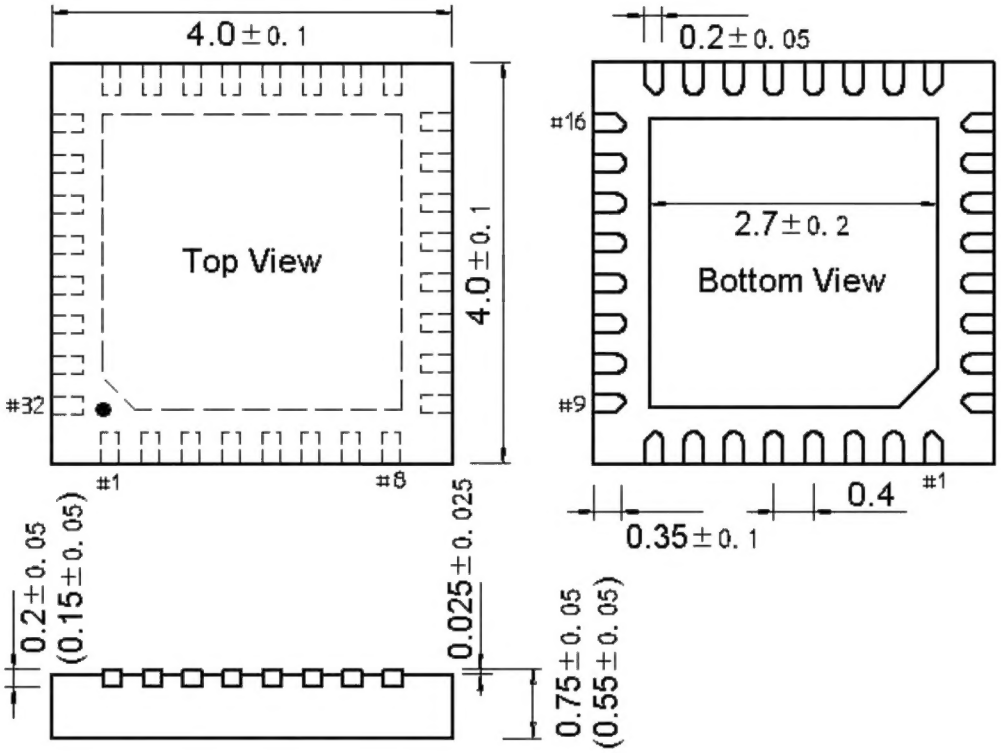
4.0±0.1
Top View
4.0±0.1
#32
#1
#8
0.2±0.05
#16
2.7±0.2
Bottom View
#9
#1
0.4
0.35±0.1
0.2±0.05
(0.15±0.05)
0.025±0.025
0.75±0.05
(0.55±0.05)

QFN20

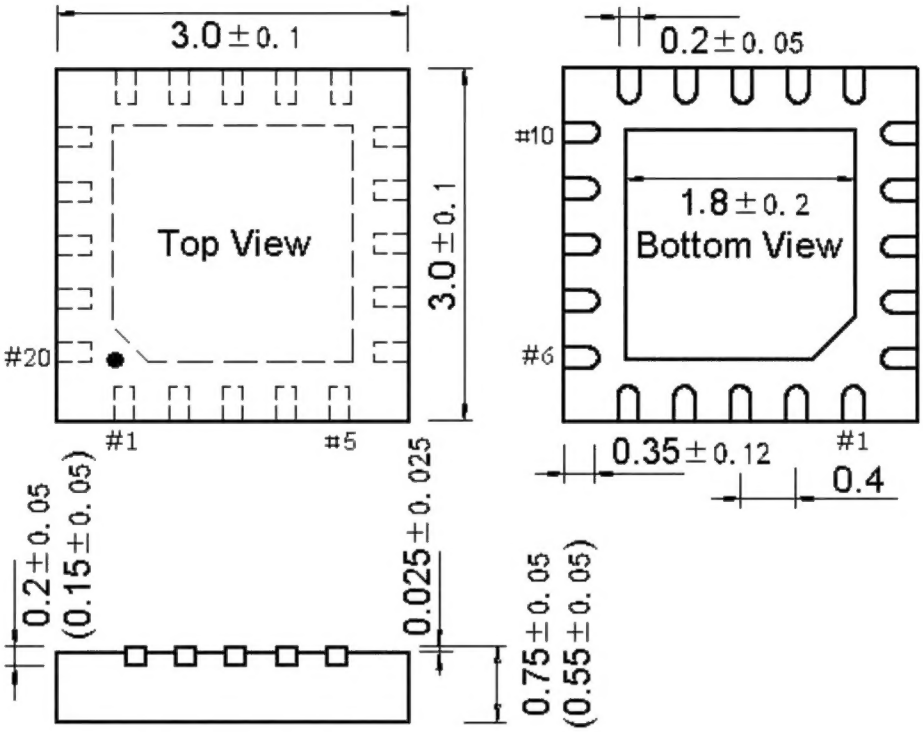
3.0±0.1
Top View
3.0±0.1
#20
#1
#5
0.2±0.05
#10
1.8±0.2
Bottom View
#6
#1
0.35±0.12
0.4
0.2±0.05
(0.15±0.05)
0.025±0.025
0.75±0.05
(0.55±0.05)

QFN26C3

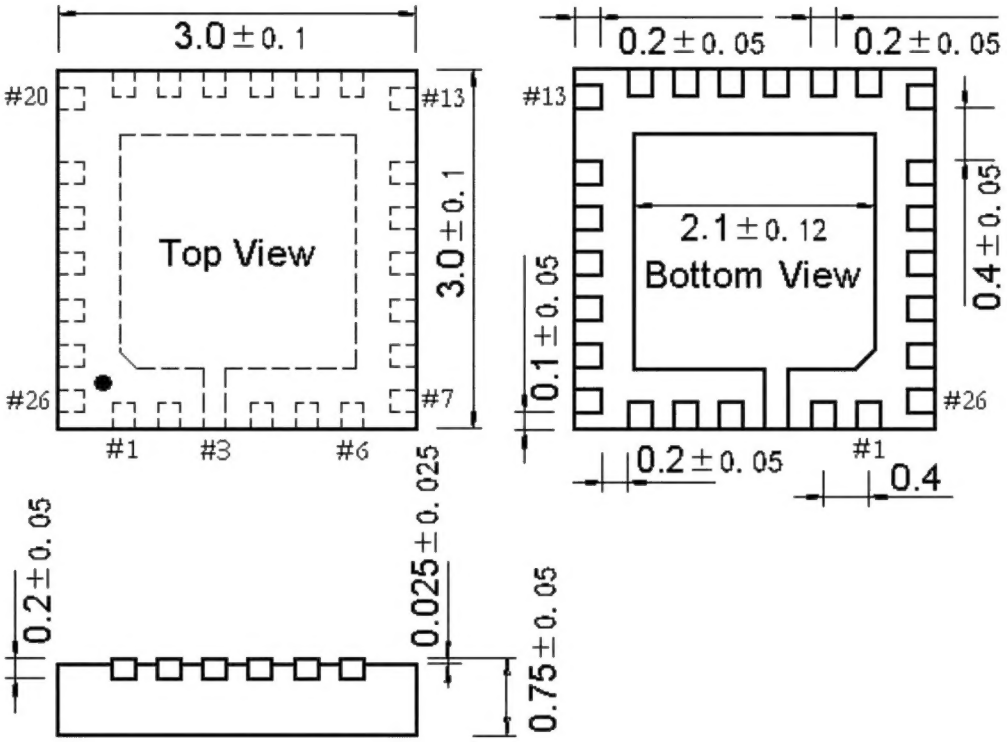
3.0±0.1
#20
#13
Top View
3.0±0.1
#26
#7
#1
#3
#6
0.2±0.05
0.2±0.05
#13
2.1±0.12
Bottom View
0.4±0.05
0.1±0.05
#26
0.2±0.05
#1
0.4
0.2±0.05
0.025±0.025
0.75±0.05